STATE	PROJECT NO.	YEAR	SHEET NO.	TOTAL SHEETS
KANSAS	52 C-4611-01	2015	1	64

STATE OF KANSAS

DEPARTMENT OF TRANSPORTATION

PLAN AND PROFILE OF PROPOSED

STATE HIGHWAY

FEDERAL AID PROJECT

LEAVENWORTH COUNTY
CEMETERY ROAD BRIDGE REPLACEMENT

KDOT PROJ. NO. 52 C-4611-01
FEDERAL PROJ. NO. STP-C461(101)

GRADING
BRIDGE
SEEDING

NOTE: ROAD CLOSED TO THROUGH TRAFFIC DURING CONSTRUCTION.

INDEX OF SHEETS

1	Title Sheet
2	Typical Sections
3	Plan & Profile Sheet
4 - 5	Bridge Approach Details
6	Grading Detail Sheet
7	Guardrail Layout Sheet
8 - 15	Guardrail Details
16 - 35	Bridge Sheets
36	Summary of Quantities
37 - 44	Temporary Erosion and Pollution Control Details
45	Permanent Seeding Sheet
46 - 49	Signing Details
50 - 52	Signing Quantities
53 - 58	Traffic Control Details
59	Traffic Control Quantities
60 - 64	Cross Sections

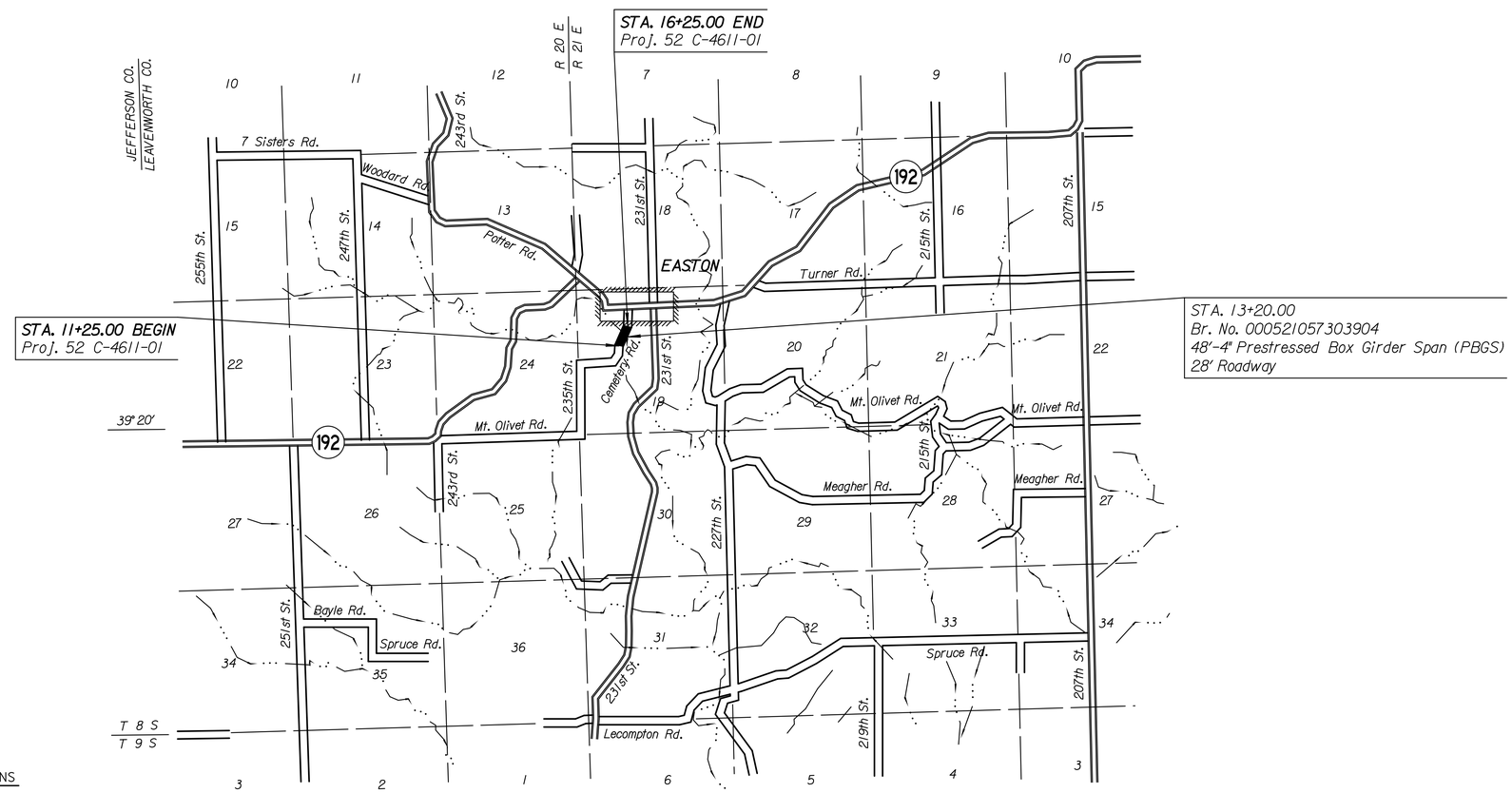

DESIGN DESIGNATION

AADT	85
V	40 mph
C of A	NONE
Clear Zone	N/A

CONVENTIONAL SIGNS

COUNTY LINE
CITY LIMITS
STATE OR NATIONAL LINE
TOWNSHIP, SECTION or GRANT LINE
PROPERTY LINE
HIGHWAY FENCE
EXISTING FENCE
GUARDRAIL
CONSTRUCTION LIMITS
RIGHT OF WAY LINE
TRAVELED WAY
RAILROADS
CENTER LINE OF PROJECT
TERRACE
CULVERTS
DROP INLET & STORM SEWER
ACCESS CONTROL
POWER POLE
TELEPHONE POLE
MARSH
HEDGE
TREES
PROFILE ELEVATION
STREAM or CREEK

GROSS LENGTH OF PROJECT	500 FT. (Includes Equations)	
EXCEPTIONS		
NET LENGTH OF PROJECT	500 FT.	0.095 MILES
NET LENGTH OF BRIDGES	50 FT.	0.010 MILES
NET LENGTH OF ROAD	450 FT.	0.085 MILES

RECOM. FOR APPROVAL-DATE

LOCAL PUBLIC OFFICIAL

KANSAS DEPARTMENT OF TRANSPORTATION

GBA architects engineers
9801 Renner Boulevard
Lenexa, Kansas 66219
913.492.0400
www.gbateam.com

DATE	BY

SURVEY
CADD TECHNICIAN
DESIGNERS
SQUAD

Drawn By : bblizzard
File : G:\12902\Micro\Highways\12902R0101.dgn
Plotted : 7/21/2015

STATE	PROJECT NO.	YEAR	SHEET NO.	TOTAL SHEETS
KANSAS	52 C-4611-01	2015	2	64

* Dimensions and slopes for standard ditches and fills. See plan and cross-sections for variations.

Note: Intersection of all slope lines shall be softened and rounded for pleasing appearance.

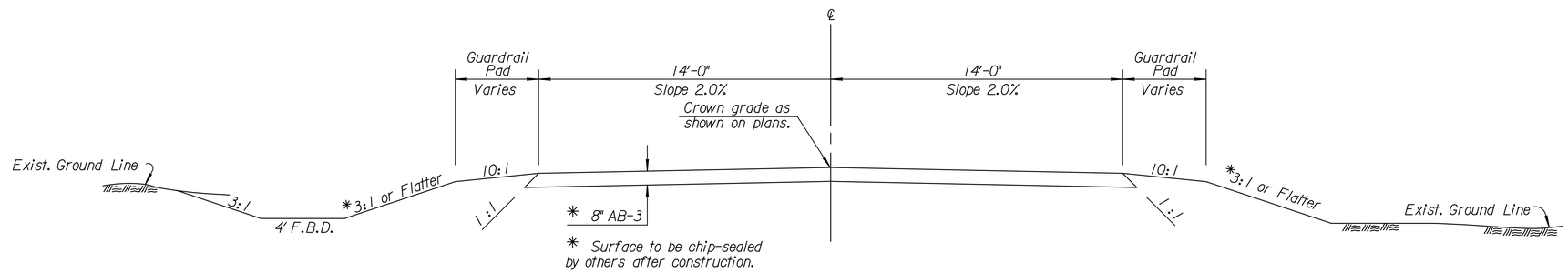

TYPICAL SECTION
CEMETERY ROAD
11+25.00 to 16+25.00

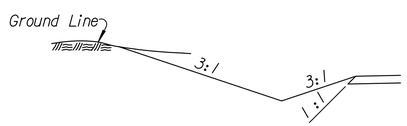

Sp. Dt. Lt.
11+25.00 to 13+00.00

BY	DATE
REFERENCES NOTED	
REFERENCES CHECKED	

Drawn By : bblizzard
File : G:\12902\MicroHighways\12902R0301.dgn
Plotted : 7/21/2015

KANSAS DEPARTMENT OF TRANSPORTATION

TYPICAL SECTION

STATE	PROJECT NO.	YEAR	SHEET NO.	TOTAL SHEETS
KANSAS	52 C-4611-01	2015	3	64

GENERAL NOTE

THE GEOLOGICAL INFORMATION SHOWN ON THESE PLANS IS FROM STUDIES MADE IN THE FIELD AND REPRESENTS THE BEST INFORMATION AVAILABLE TO THE KANSAS DEPARTMENT OF TRANSPORTATION.

AT BORROW AREA LOCATIONS ADJACENT TO THE RIGHT OF WAY, UTILITY POLES MAY BE SET AT THE PERMANENT LOCATIONS PRIOR TO CONSTRUCTION AS APPROVED BY THE ENGINEER PROVIDED A MINIMUM VERTICAL CLEARANCE, IN ACCORDANCE WITH THE NATIONAL ELECTRICAL SAFETY CODE, IS OBTAINED. THE CONTRACTOR WILL BE REQUIRED TO WORK AROUND THESE POLES TO COMPLETE THE WORK.

ALL BORROW TO BE OBTAINED FROM AREAS PROVIDED BY THE CONTRACTOR SHALL BE APPROVED BY THE ENGINEER, BOTH AS TO SUITABILITY OF MATERIAL AND SITE LOCATION. LOCATIONS WHICH, IN THE OPINION OF THE ENGINEER, CONTAIN UNSUITABLE MATERIAL OR WILL LEAVE AN UNSIGHTLY APPEARANCE ON THE PROJECT WILL NOT BE APPROVED.

CHANNELS SHALL BE CUT AT BOX CULVERTS (UNLESS OTHERWISE NOTED) TO FLOW LINE ELEVATIONS AND TO A WIDTH OF ONE FOOT OUTSIDE OF EACH OUTSIDE WALL AND WITH SLOPES 2 TO 1 PRIOR TO CONSTRUCTION OF THE CULVERT.

EMBANKMENT QUANTITIES FOR INITIAL CONSOLIDATION AND SETTLEMENT SHOWN IN THE EARTHWORK QUANTITIES ARE SUBSIDIARY TO OTHER EARTHWORK ITEMS. MATERIAL FOR THE EMBANKMENT IS INCLUDED IN THE EXCAVATION QUANTITIES.

EXCAVATION REQUIRED FOR PLACING SELECT SOIL IS INCLUDED IN THE COMMON EXCAVATION QUANTITIES.

WHERE EASEMENTS ARE SHOWN ON RAILROAD RIGHT OF WAY, THE CONTRACTOR SHALL BE REQUIRED TO WORK AROUND AND NOT DISTURB THE RAILROAD COMMUNICATION OR SIGNAL POLES OR LINES.

EXCAVATION SHOWN TO BE WASTED SHALL BE WASTED ON SITES PROVIDED BY THE CONTRACTOR. THESE SITES SHALL BE APPROVED BY THE ENGINEER AS TO SUITABILITY, APPEARANCE, AND SITE LOCATION. LOCATIONS THAT, IN THE OPINION OF THE ENGINEER, WILL LEAVE AN UNSIGHTLY APPEARANCE WILL NOT BE APPROVED.

ALL TREES, HEDGE ROWS, SHELTERBELTS, AND WOODY SHRUBS NOT SHOWN TO BE REMOVED AND LOCATED BETWEEN THE CONSTRUCTION LIMITS AND THE RIGHT-OF-WAY LINE OR EASEMENT LINE SHALL BE SPARED UNLESS DIRECTED BY THE ENGINEER TO BE REMOVED. ALL TREES WITHIN THE APPROPRIATE CLEAR ZONE SHALL BE REMOVED.

DATE	BY	
		REFERENCES NOTED
		REFERENCES CHECKED

GBA #101 16.53' Lt., @ Sta. 10+44.18
Set 1/2" Bar and Cap along Westerly side of Cemetery Road.
1. N=380,124.89 E=2,127,323.00
2. Mag nail and shiner in the NE face of power pole. 49.64' WSW
3. 60D nail and shiner West face 15" Elm tree 49.63' South
4. Westerly edge gravel Cemetery Road. 3.45' East
5. Top centerline West end 42" C.M.P. under Cemetery Road. 18.00' NNE
6. Centerline North end existing Bridge Cemetery Road. 300.60' NE

Cemetery Road, @ P.O.T. Sta. 10+00.00
1. N=380,077.78 E=2,127,325.34
2. Not Set

Cemetery Road, @ P.C. Sta. 11+57.93
1. N=380,228.88 E=2,127,371.46
2. Not Set

Cemetery Road, @ P.I. Sta. 11+72.44 Bk.
Sta. 17+72.44 Ahd.
1. N=380,242.76 E=2,127,375.70
2. Not Set

Cemetery Road, @ P.T. Sta. 11+86.95
1. N=380,256.37 E=2,127,380.73
2. Not Set

Cemetery Road, @ P.C. Sta. 14+60.68
1. N=380,513.10 E=2,127,475.70
2. Not Set

Cemetery Road, @ P.I. Sta. 14+65.95 Bk.
Sta. 14+65.95 Ahd.
1. N=380,518.04 E=2,127,477.53
2. Not Set

Cemetery Road, @ P.T. Sta. 14+71.22
1. N=380,522.95 E=2,127,479.46
2. Not Set

Cemetery Road, @ P.O.T. Sta. 16+98.35
1. N=380,734.26 E=2,127,562.73
2. Not Set

GBA #100 16.23' Rt., @ Sta. 15+54.97
Set 1/2" Bar and Cap along Easterly side of Cemetery Road.
1. N=380594.92 E=2127525.26
2. Mag nail and shiner in the NE face of power pole. 34.65' WNW
3. East edge asphalt Cemetery Road. 2.50' West
4. Mag nail East face power pole. 132.29' SW
5. Centerline North end existing bridge Cemetery road. 211.00' SSW

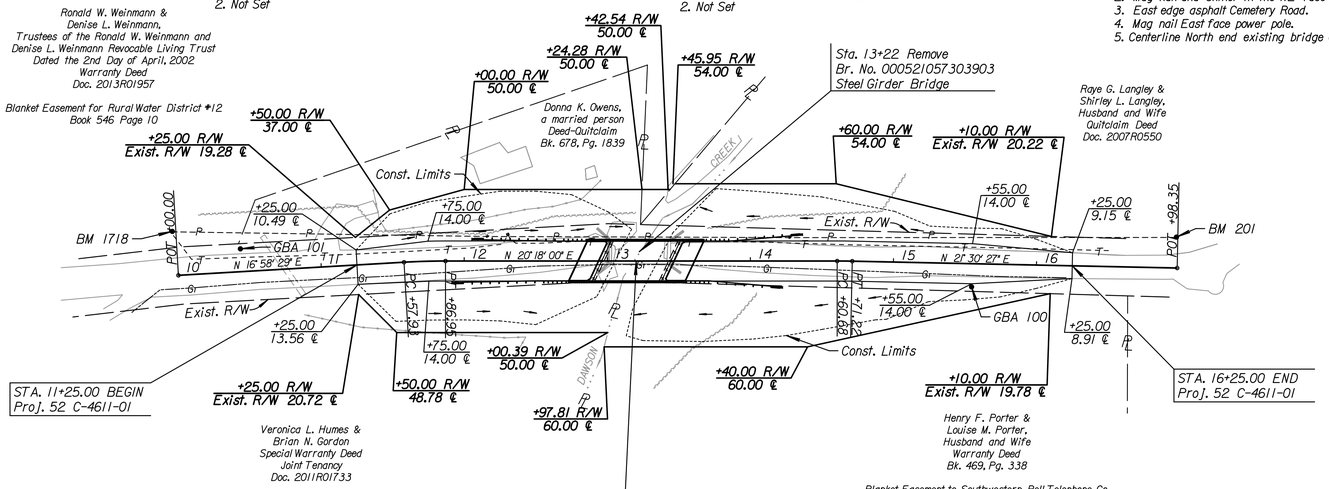

For guardrail and taper information see sheet 7

Cemetery Rd. Sta. 13+20.28
Construct Br. No. 0005210573039 04
48'-4" PBGS Span
Pile Bent Abutments,
28'-0" Roadway, Skew 25° 00' 00" Rt.

P.I. Sta. 11+72.44 (Bk.)
Δ = 3° 19' 31" (RT)
D = 11° 27' 33"
R = 500.00'
T = 14.51'
L = 29.02'
E = 0.21'

P.I. Sta. 14+65.95 (Bk.)
Δ = 1° 12' 27" (RT)
D = 11° 27' 33"
R = 500.00'
T = 5.27'
L = 10.54'
E = 0.03'

West 1/4 Cor. 19, T8S, R21E
1. Found 1/2" bar & cap 0.15' below travelway Cemetery Road.
2. N=379,278.644 E=2,125,648.891 (US Feet KS N SPC NAD 83)
3. 60D nail and washer top of fence corner post. 27.83' W
4. 60D nail and washer south face 16" Pine tree. 29.90' NNW
5. 60D nail and washer top of fence post. 79.87' ESE
6. @ center line travelway 235th Street to the south.
7. @ center line travelway Cemetery Road to the east.

Center Cor. Sec. 19, T8S, R21E
1. Found 1/2" bar 0.15' below asphalt travelway 231st Street.
2. N=379,366.598 E=2,128,402.759 (US Feet KS N SPC NAD 83)
3. Mag nail top of telephone riser guard post. 38.08' NE
4. 40D nail north face power pole. 29.90' W
5. Near face 3" dia steel mailbox post in concrete. 71.10' SSE
6. @ center line travelway 231st Street.

BM #1718 - Set railroad spike in North face power pole.
10+00.00, 30.71' LT Elev. 916.99'

BM #201 - Set railroad spike in power pole.
16+96.66, 21.33' LT Elev. 899.12'

SCALE
50' 0 50' 100'
PLAN: Lat. & Long.
PROFILE: Horiz. same as above
Vert.
5' 0

Project Survey Control

Proj. Coord. x 0.999920098 = NGS State Plane Coords
Kansas North Zone
NAD 1983

Vert. Datum: Sea Level Datum of NAVD 1988

Utility Owners

Ungd. Tel. (T) — Century Link
Attn: Mr. Richard Demel
122 N. 7th Street
Hiawatha, KS 66434
Ph: 785-742-2001

Ovhd. Power (P) — Westar Energy
Attn: Mr. Aaron K. Holthaus
2720 2nd Avenue
Leavenworth, KS 66048
Ph: 913-758-2710

Gas (G) — Atmos Energy
Attn: Mr. Richard Yunghans
25090 W. 110th Terrace
Olathe, KS 66061
Ph: 913-254-6355

Water (W) — Jefferson County RWD No. 12
Attn: Denise Eggers
P O Drawer C
216 Winchester Street
Winchester, KS 66097
Ph: 913-774-2872

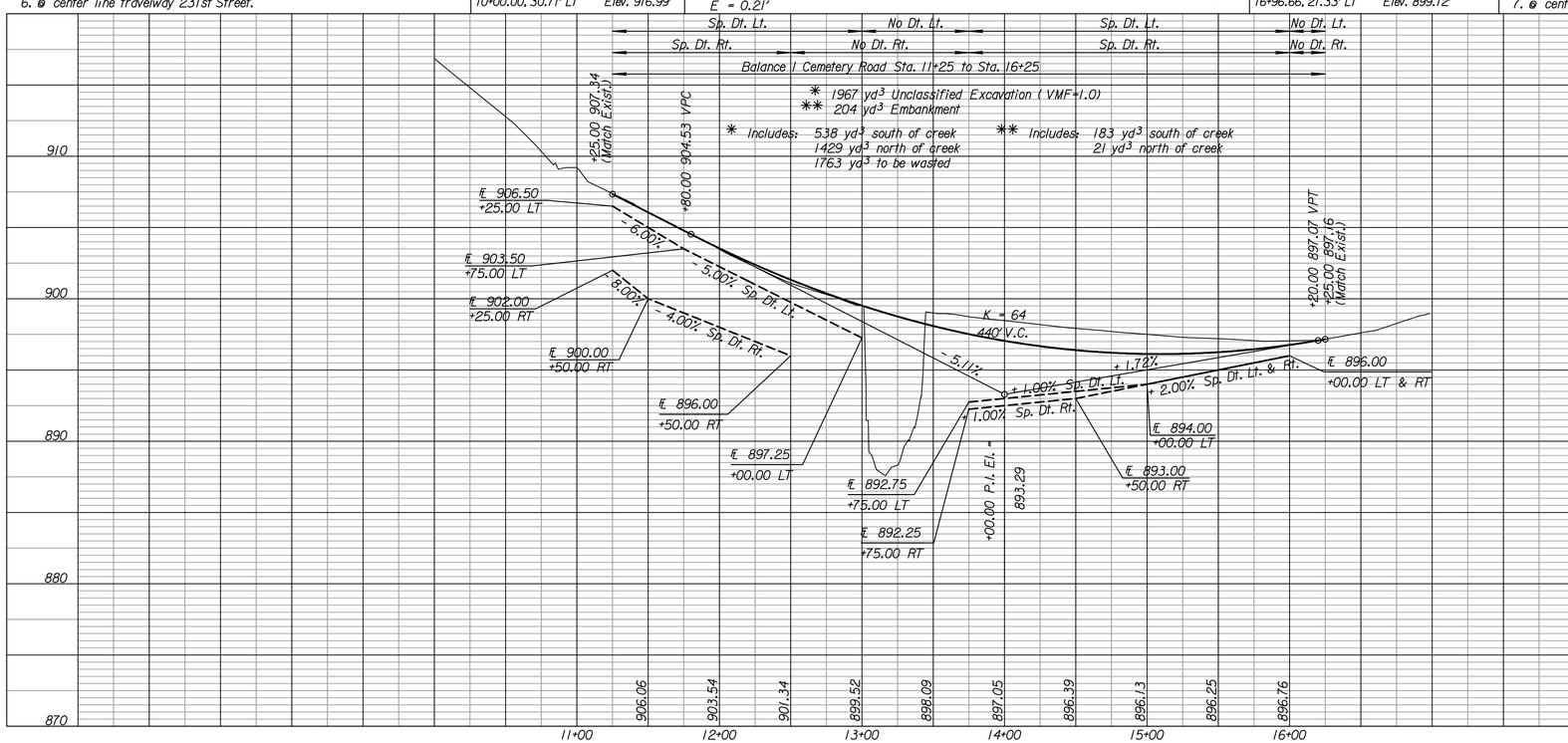

KANSAS DEPARTMENT OF TRANSPORTATION

PLAN AND PROFILE

STA. 11+25.00 TO STA. 16+25.00

Drawn By : bblizzard
File : G:\12902\Micro\Highways\12902R13301.dgn
Plotted : 7/21/2015

STATE	PROJECT NO.	YEAR	SHEET NO.	TOTAL SHEETS
KANSAS	52 C-4611-01	2015	4	64

⊛ Details for 4" Edge Curb, See Details of Thrie Beam Guardrail at Wingwall.

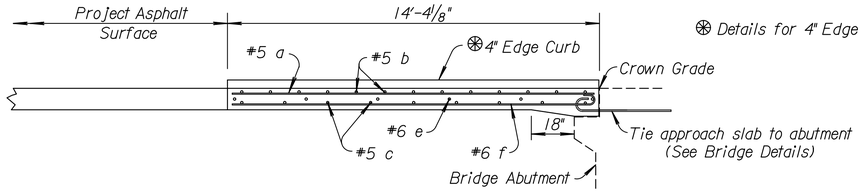

LONGITUDINAL SECTION ON CENTER LINE

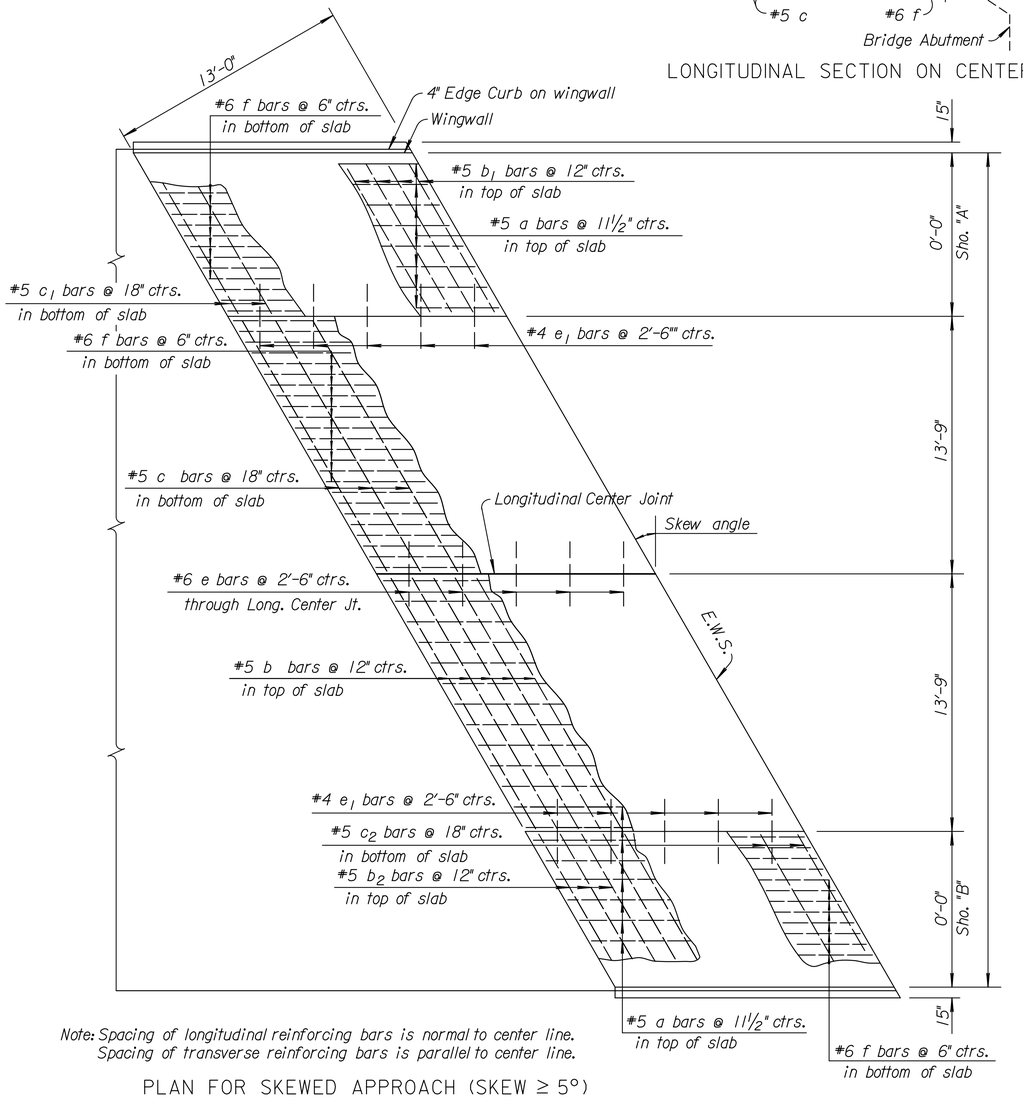

Note: Spacing of longitudinal reinforcing bars is normal to center line.
Spacing of transverse reinforcing bars is parallel to center line.

PLAN FOR SKEWED APPROACH (SKEW ≥ 5°)
(No Scale)

"D" Thickness = Thickness of Project Concrete Pavement (10" minimum).

GENERAL NOTE

Special Concrete Bridge Approach shall be paid for as Sq. Yds. of Concrete Pavement (10" Unif.)(AE) and includes all work and materials required to construct the approach slab as shown on this sheet.

All work and materials required for installation of joint material shall be subsidiary to this bid item.

At the Contractor's option #4x3'-0" tie bars @ 15" centers may be substituted for the #6 e bars at 2'-6" centers.

All reinforcing steel shall be epoxy coated.

See Standard Drawing RD711 for details of Joints and edge curb.

Clearance from the face of concrete for all reinforcing steel shall be 2 inches.

Standard reinforcing bar hooks in accordance with the latest ACI specifications shall be used throughout.

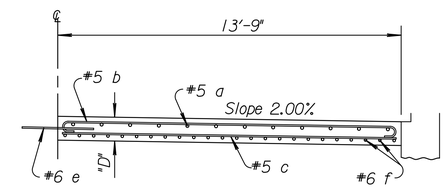

TYPICAL HALF SECTION
(No Scale)

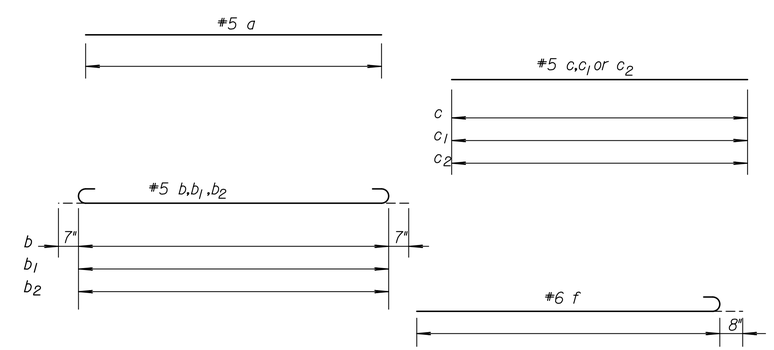

Note: All dimensions are out to out on bars. unless noted otherwise.

BENDING DIAGRAMS

NO.	DATE	REVISIONS	BY	APP'D
9	9-09-09	Revised Reinforcing Steel listing	S.W.K.	J.O.B.
8	5-14-09	Revised General Note	S.W.K.	J.O.B.
7	10-30-08	Added guardrail post detail at curb	S.W.K.	J.O.B.
6	11-07-07	Revised pavement slope to percent	S.W.K.	J.O.B.

KANSAS DEPARTMENT OF TRANSPORTATION

CONCRETE BRIDGE APPROACH PAVEMENT ADJACENT TO ASPHALT SURFACE

~~RD715~~

FHWA APPROVAL	6-9-09	APP'D. James O. Brewer	
DESIGNED	DETAILED	QUANTITIES	TRACED Bowser
DESIGN CK.	DETAIL CK.	QUAN.CK.	TRACE CK. King

Note to Designer: The designer shall be responsible for designating pavement thickness and computing reinforcing steel and concrete quantities and dimensions necessary to complete this sheet

Drawn By : bblizzard
G:\12902\Micro\Highways\12902R2112-rd715.dgn
Plotted : 7/21/2015

STATE	PROJECT NO.	YEAR	SHEET NO.	TOTAL SHEETS
KANSAS	52 C-4611-01	2015	5	64

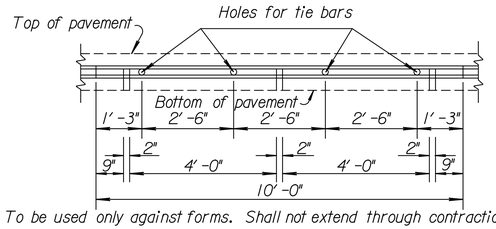

To be used only against forms. Shall not extend through contraction joints.

METAL STRIP FOR
LONGITUDINAL CONSTRUCTION JOINT (10'-0")

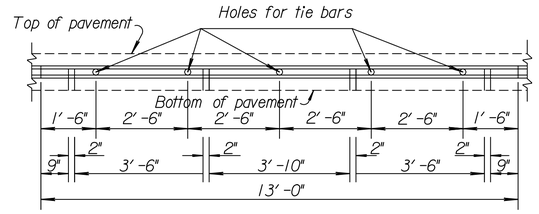

To be used only against forms. Shall not extend through contraction joints.

METAL STRIP FOR
LONGITUDINAL CONSTRUCTION JOINT (13'-0")

GENERAL NOTES

All work shall be done in conformity with the Standard Specifications applicable to the project.

The cost of all bars and joint material shown on this sheet is to be included in the bid price for Concrete Pavement.

At each planned transverse joint location, a 4 to 6 inch wide strip of the pavement surface shall be protected from the texturing operation to provide a transverse textureless surface centered over the joint sawcut.

All sawed joints on this project shall be filled with sealant in accordance with Standard Specifications.

The 4 inch edge curb shall be constructed integral with the approach slab shoulder.

All materials and work required for this construction shall be Subsidiary to the concrete approach slab.

Tie bars shall be evenly spaced along the length of the slab and no tie bars shall be within 12" of contraction joint.

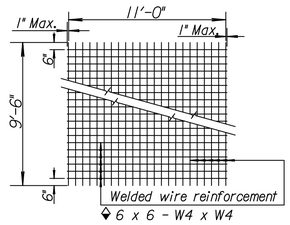

TYPICAL SHEET OF WELDED WIRE REINFORCEMENT
FOR SPECIAL BRIDGE APPROACH PAVEMENT

◆ Note: Epoxy coated #3 bars longitudinally @ 12" ctrs. & #3 bars transversely @ 18" ctrs. may be substituted for each layer of epoxy coated welded wire reinforcement.

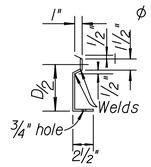

SECTION OF RECESSED
FORM LEG

ϕ Snap-in leg or other approved designs may be used in lieu of welded leg.

DETAIL OF LAP FOR WELDED WIRE REINFORCEMENT

The lap shall extend beyond the first transverse or bag wire of each sheet.

The sheet shall be wired securely at the edges and at intervals not to exceed 2'-6" for the full width of the sheet. Approximate weight of welded wire reinforcement = 58 lbs. per 100 sq. ft. Other methods for fastening the sheets of welded wire reinforcement at the laps may be used with the approval of the Engineer.

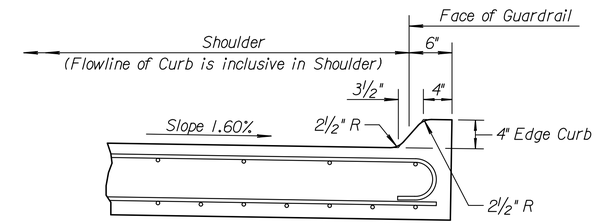

SECTION A-A

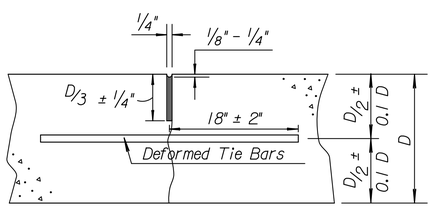

Tied Non-Keyed

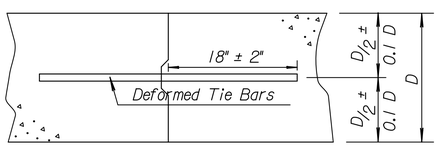

Tied Keyed Construction

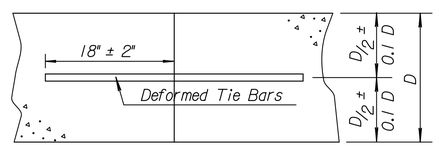

Tied Butt Construction

LONGITUDINAL JOINTS

Note: For longitudinal construction joints the contractor has the option of using either the keyed or butt type. Place deformed tie bars mid-depth of the shoulder.

⊛ No 4" Curb transition when adjacent to Flume Inlet.

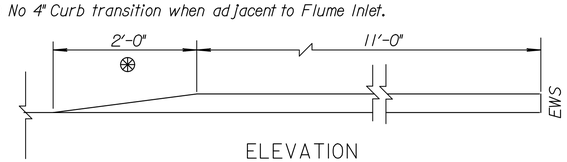

ELEVATION

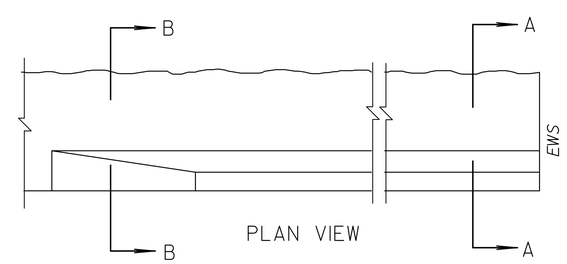

PLAN VIEW

4" EDGE CURB DETAIL

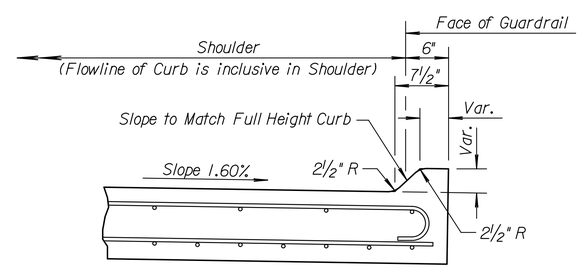

SECTION B-B

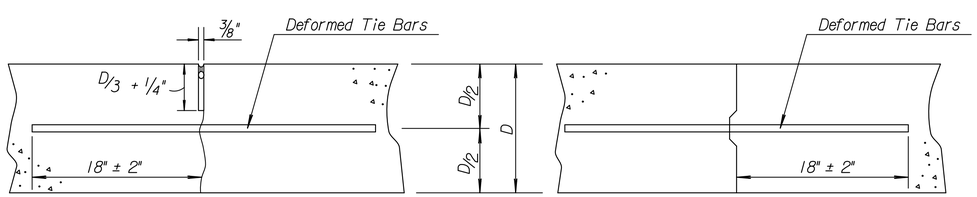

Monolithic Pour

Construction Joint

TRANSVERSE JOINTS

Note: A construction joint is required when the concrete placement has been interrupted for a substantial length of time or at the end of a day's placement.

NO.	DATE	REVISIONS	BY	APP'D
13	5-17-13	Revised Note, Longitudinal Joints	S.W.K.	J.O.B.
12	5-14-09	Pres. Relief Jt. to RD712/tie bar lab.	S.W.K.	J.O.B.
11	10-23-08	Revised Sec. A-A and Sec. B-B	S.W.K.	J.O.B.
10	10-3-07	Add. manufacturer jt. size recom'd.	S.W.K.	J.O.B.

KANSAS DEPARTMENT OF TRANSPORTATION

MISCELLANEOUS DETAILS FOR CONCRETE BRIDGE APPROACH PAVEMENT

RD711

FHWA APPROVAL	10-23-13	APP'D. James O. Brewer	
DESIGNED	DETAILED	QUANTITIES	TRACED Bowser
DESIGN CK.	DETAIL CK.	QUAN.CK.	TRACE CK. King

KDOT Graphics Certified 10-28-2013

KDOT Graphics Certified

Drawn By : bblizzard
File : G:\12902\MicroHighways\12902R21110-rd711.dgn
Plotted : 7/21/2015

STATE	PROJECT NO.	YEAR	SHEET NO.	TOTAL SHEETS
KANSAS	52 C-4611-01	2015	6	64

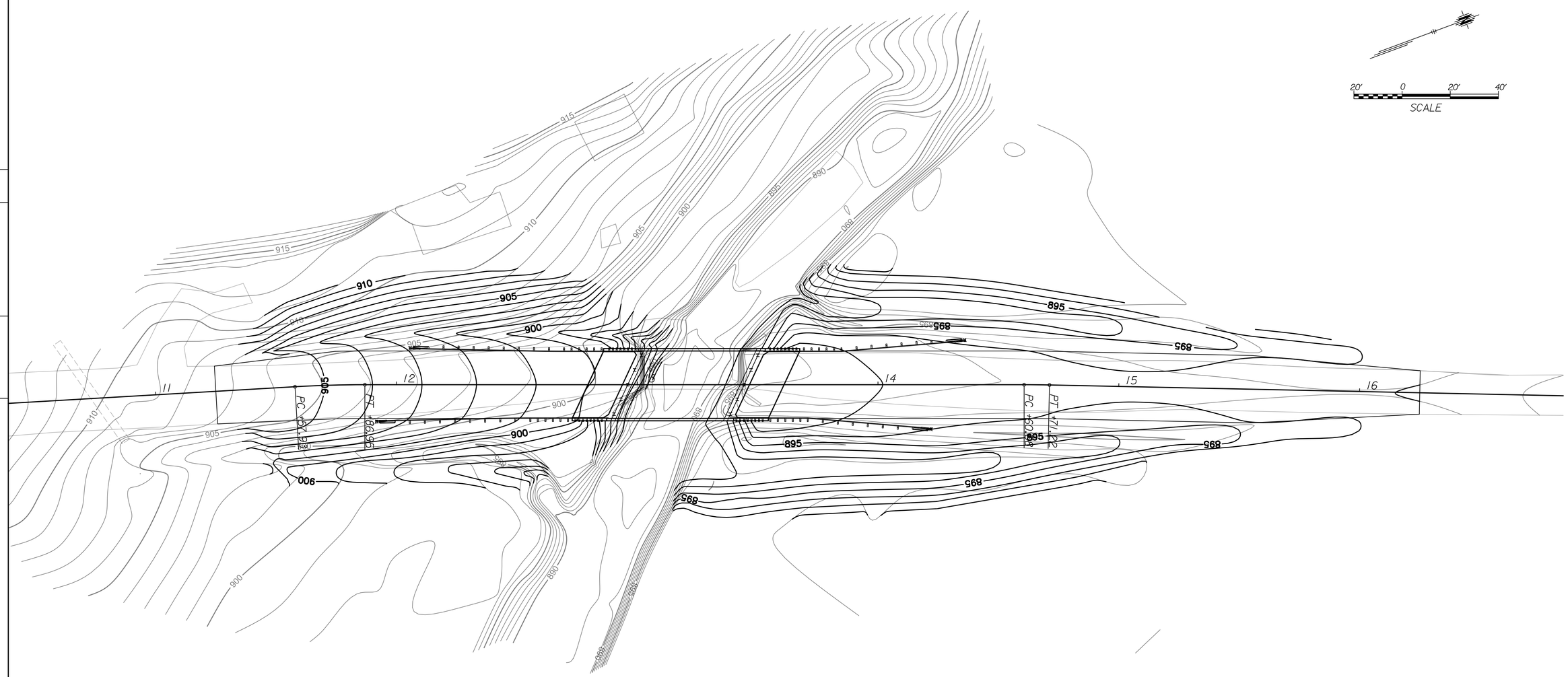

DATE	BY	
		REFERENCES NOTED
		REFERENCES CHECKED

Drawn By : bblizzard Plotted :7/21/2015
File : G:\12902\Micro\Highways\12902R0702.dgn

KANSAS DEPARTMENT OF TRANSPORTATION

GRADING DETAIL SHEET

STATE	PROJECT NO.	YEAR	SHEET NO.	TOTAL SHEETS
KANSAS	52 C-4611-01	2015	7	64

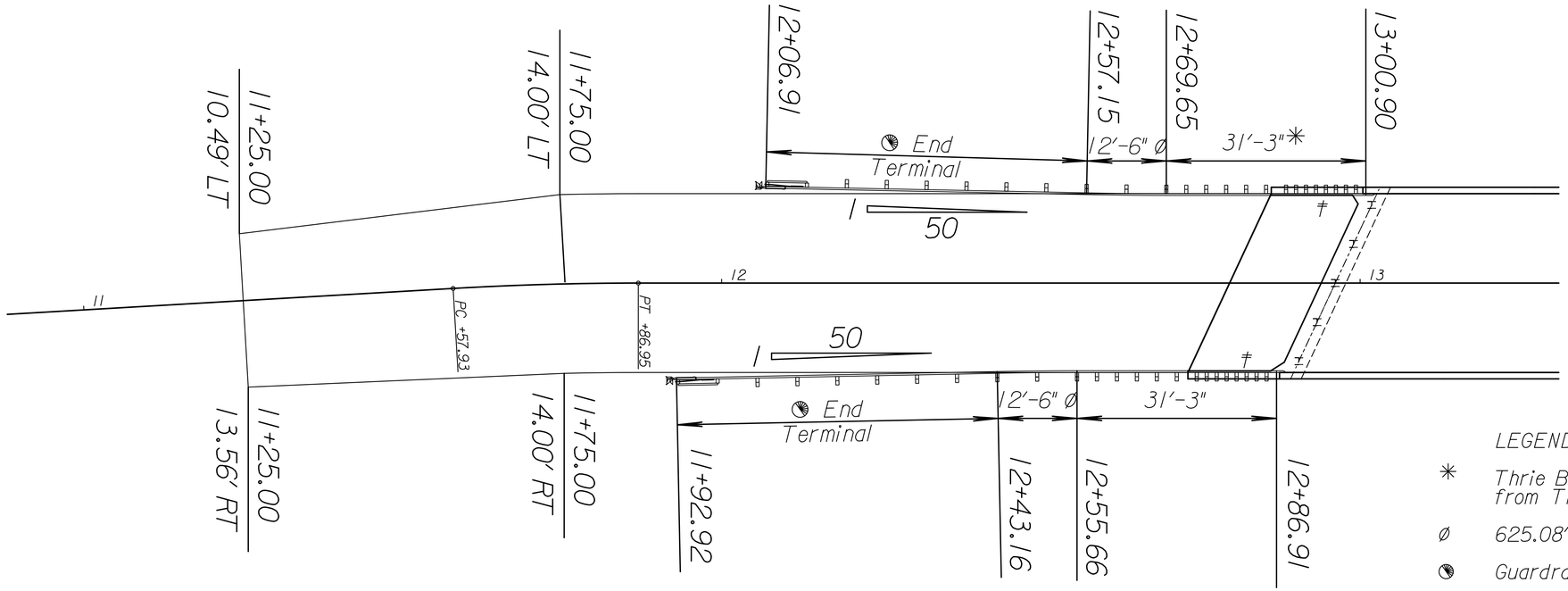

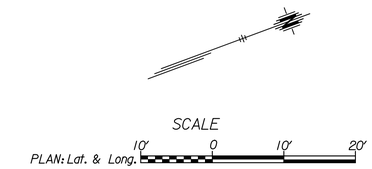

LEGEND

✳ Thrie Beam Transition (Includes 6'-3" Transition from Thrie Beam to W Beam)

Ø 625.08' Radius

◔ Guardrail End Terminal (X-LITE or SKT)

□ Guardrail End Terminal (FLEAT or SRT)

ǂ Guardrail to be attached to wing

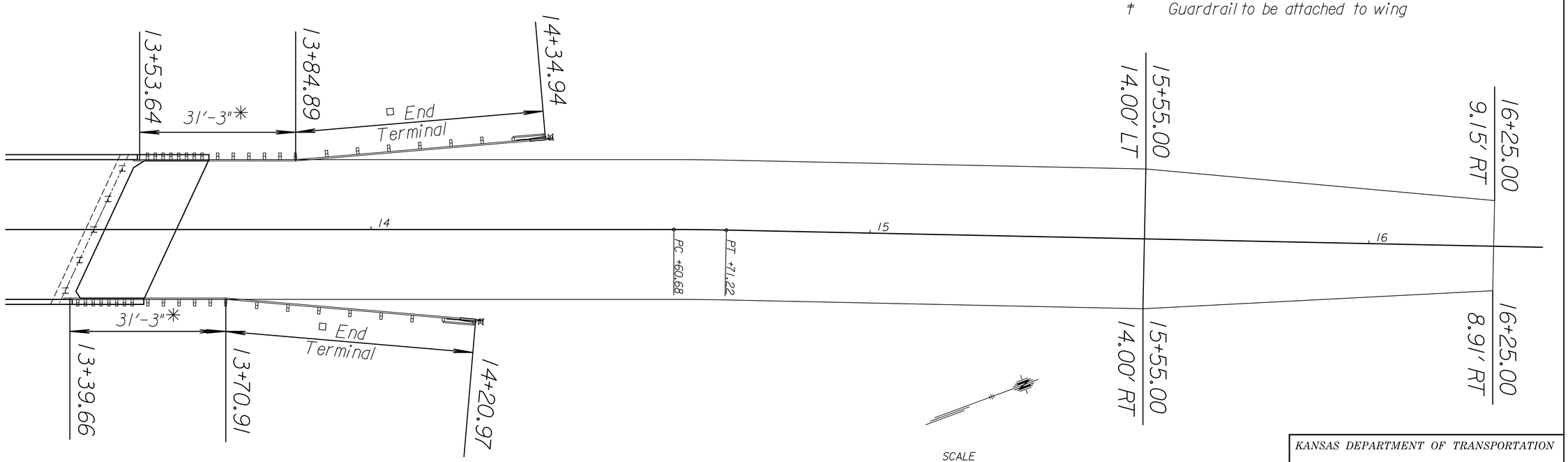

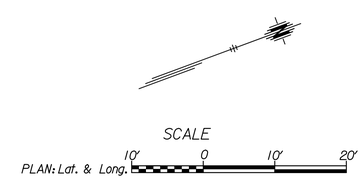

KANSAS DEPARTMENT OF TRANSPORTATION

GUARDRAIL LAYOUT

DATE	BY	
		REFERENCES NOTED
		REFERENCES CHECKED

Drawn By : bblizzard
File : G:\12902\Micro\Highways\12902R2101-Guardrail Details.dgn
Plotted : 7/21/2015

STATE	PROJECT NO.	YEAR	SHEET NO.	TOTAL SHEETS
KANSAS	52 C-4611-01	2015	8	64

NOTE: Layouts 1, 2, 3, and 4 will be symmetric for any quadrant unless otherwise shown in the plans.

When using Rubrail, attach Std. Drawings No. RD611, RD616 and RD615 or RD615A.

When using Thrie beam, attach Std. Drawings no. RD611 and RD608 or RD613.

Attach Std. Drawing No. RD617 or RD 617A for post over box less than full depth.

◫ Radius = 625.08'

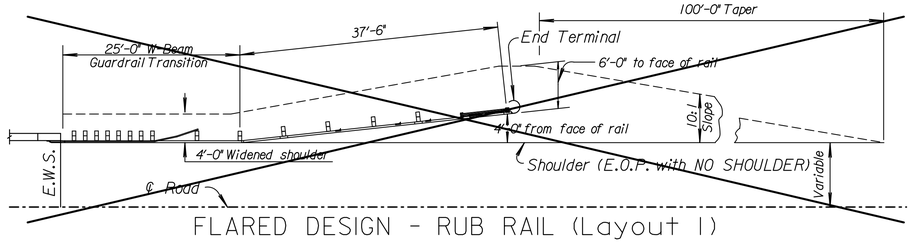

FLARED DESIGN - RUB RAIL (Layout 1)

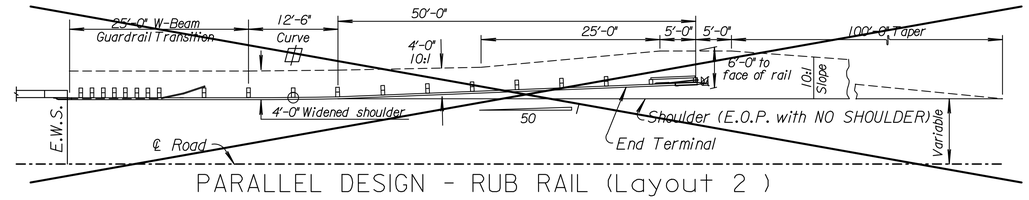

PARALLEL DESIGN - RUB RAIL (Layout 2)

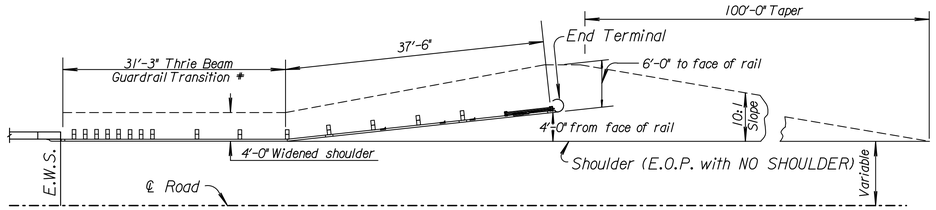

FLARED DESIGN - THRIE BEAM (Layout 3)

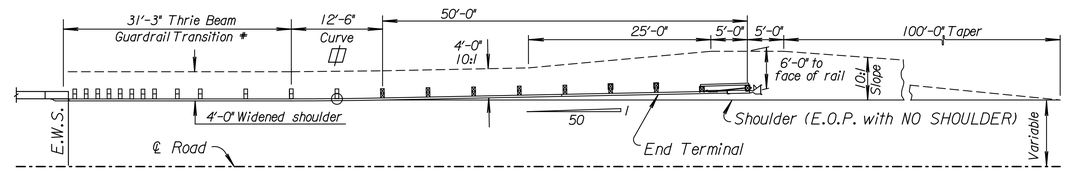

PARALLEL DESIGN - THRIE BEAM (Layout 4)

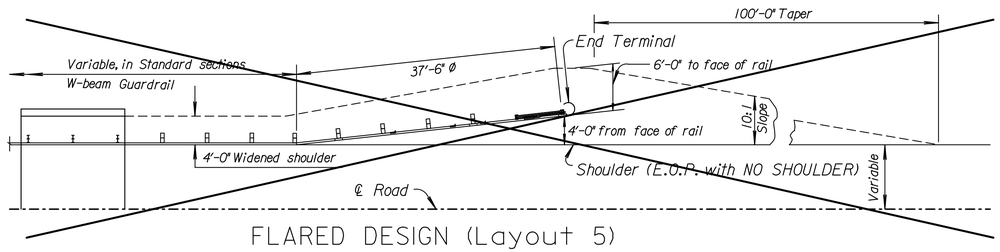

FLARED DESIGN (Layout 5)

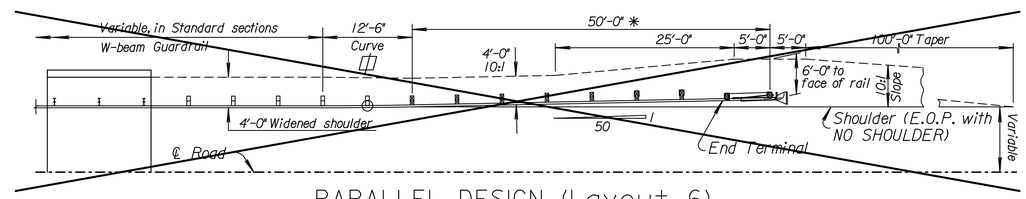

PARALLEL DESIGN (Layout 6)

TYPICAL ALIGNMENT OF GUARDRAIL AT CULVERTS & BOX BRIDGES

ALLOWABLE END TERMINALS

TYPE	Layout 1	2	3	4	5	6	Required Standard Drawing
SRT	X		X		X		RD621A
FLEAT	X		X		X		RD606B
SKT		X		X		X	RD606C
X-LITE		X◔		X◔	X	X◔	RD606H for Parallel, RD606G for Flared

◔ The additional panel (12'-6") required to attain the 50' dimension shown in the Parallel Design layouts will be subsidiary to the Bid Item Guardrail End Terminal (X-LITE).

SUMMARY OF STEEL PLATE GUARDRAIL

Location	Side	Layout No.	Layout Lin. Ft.*	Additional Standard Sections Lin. Ft.	Total Pay Length Lin. Ft.	Layout 1 or 3: Gd. Rail End Term. (SRT) Alt. #1 Each	Layout 1 or 3: Gd. Rail End Term. (FLEAT) Alt. #2 Each	Layout 2, 4, or 6: Gd. Rail End Term. (SKT) Alt. #1 Each	Layout 2, 4, or 6: Gd. Rail End Term. (X-LITE) Alt. #2 Each	Layout 5: Gd. Rail End Term. (SRT) Alt. #1 Each	Layout 5: Gd. Rail End Term. (FLEAT) Alt. #2 Each	Layout 5: Gd. Rail End Term. (X-LITE) Alt. #3 Each
South of Bridge	Rt.				43.75			1	1			
South of Bridge	Lt.				43.75			1	1			
North of Bridge	Rt.				31.25	1	1					
North of Bridge	Lt.				31.25	1	1					
TOTAL LENGTH					150.00	2	2	2	2			

*See Gd. Rail Terminal Standard Drawings for Measurement Details. Does Not Include End Terminal.

NO.	DATE	REVISIONS	BY	APP'D
10	01-06-15	Added X-Lite, Removed ET-PLUS	TLS	RJS
9	11-9-05	Added length for Thrie Beam transition	REA	RJS
8	7-19-05	Added and updated new End Terminals.	DMK	RJS
7	12-1-03	Chg ref to Drawings/Dim. line Perp to ℄/Add 'pay'	DMK	RJS

KANSAS DEPARTMENT OF TRANSPORTATION

TYPICAL ALIGNMENT OF GUARDRAIL INSTALLATIONS

~~LP620~~

FHWA APPROVAL		APP'D.	RJS
DESIGNED	DETAILED TLS	QUANTITIES	TRACED
DESIGN CK.	DETAIL CK. RJS	QUAN.CK.	TRACE CK.

CADconform Certify This File

Drawn By : bblizzard Plotted : 7/21/2015
File : G:\12902\Micro\Highways\12902R2102-lp620.dgn

CADconform Certify This File

STATE	PROJECT NO.	YEAR	SHEET NO.	TOTAL SHEETS
KANSAS	52 C-4611-01	2015	9	64

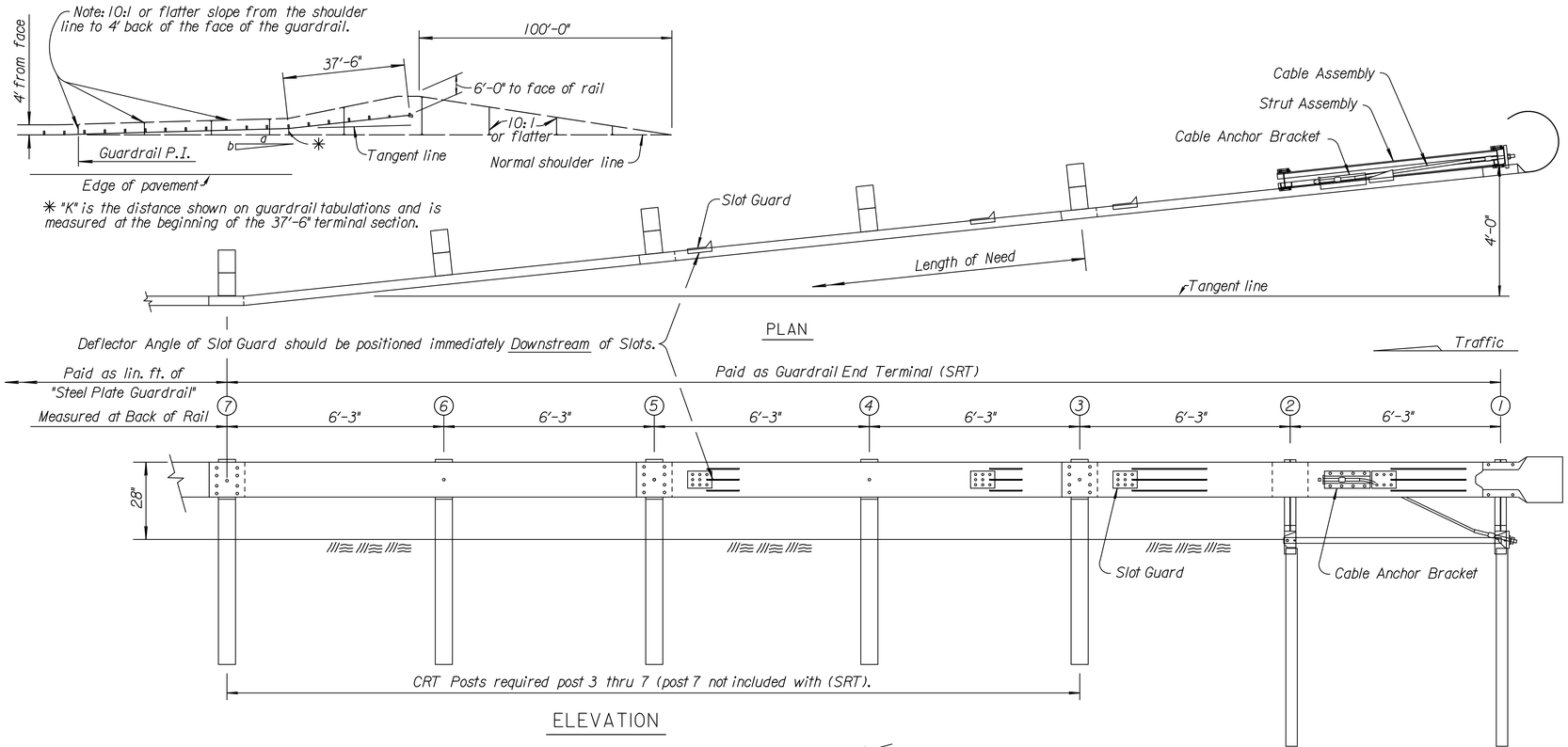

GENERAL NOTE

Use approved wood (shown & described) or steel posts ① through ⑥ on the (SRT) provided by the manufacturer. Terminal post type used is independent of post type used on the remainder of the installation. No mixing of post types allowed in guard fence run.

Lap guardrail splices, including terminal connector, in the direction of traffic. Where traffic is temporarily carried in the opposite direction of final configuration, lap rail splices in the direction of permanent traffic.

The cable anchor assembly must be taut. Use a locking device, (vice grips or channel lock pliers) to prevent the cable from twisting when tightening the nuts.

When rock is encountered during installation, see Manufacturer's Installation Manual for procedure.

End Terminal (SRT) details shown on this sheet are for "Information Only" and may not be an exact detail. See Manufacturer's Installation Manual (furnished to Engineer) for component details and installation instructions.

All work and materials required for installation of this terminal are paid under the bid item "Guardrail End Terminal (SRT)".

Galvanize all steel parts after fabrication.

See Standard Drawings RD611 and RD613 for guardrail details not shown.

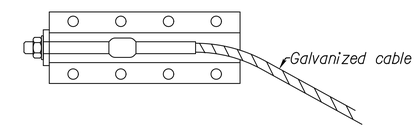

CABLE ANCHOR BRACKET

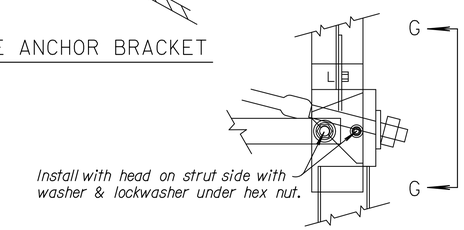

DETAIL "G" (Post #1)

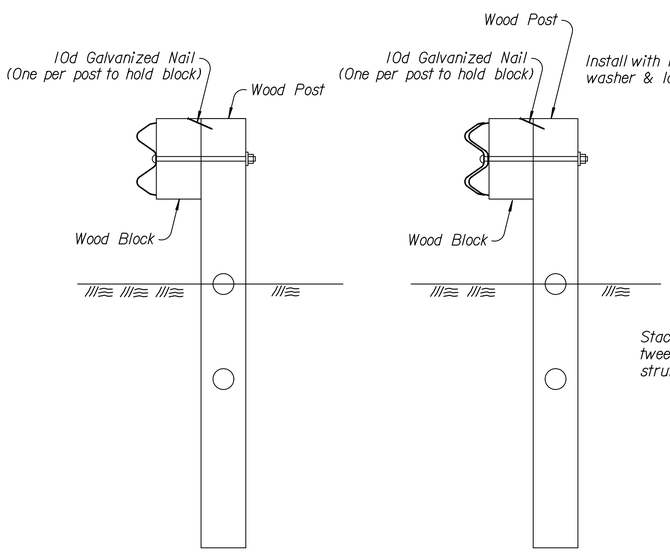

DETAIL OF CRT POSTS (Post #4 & 6)

DETAIL OF CRT POSTS (Post #3,5 & 7)

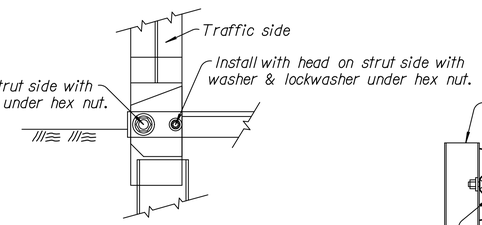

VIEW H-H (Post #2)

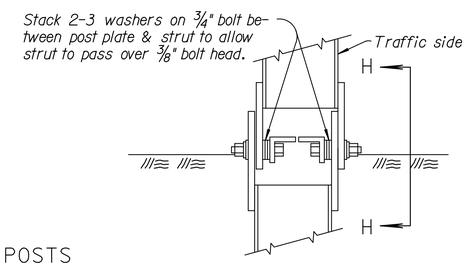

DETAIL "H" (Post #2)

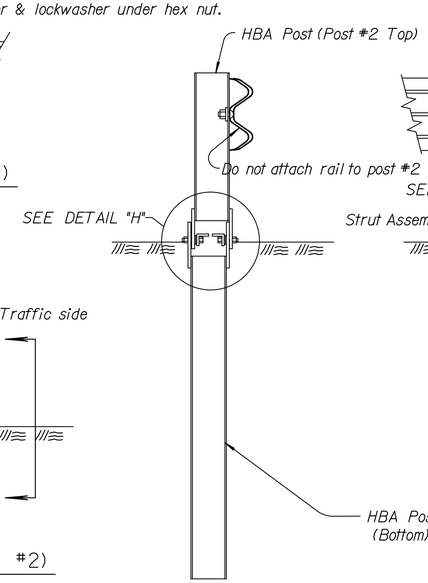

DETAIL OF POST #2

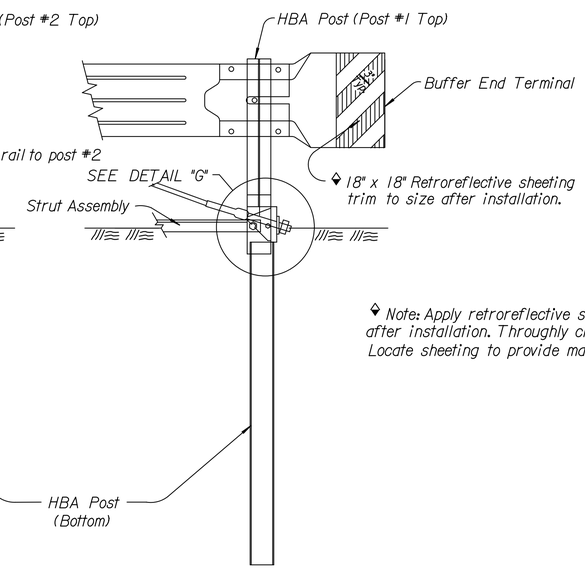

ENLARGED VIEW @ POST #1

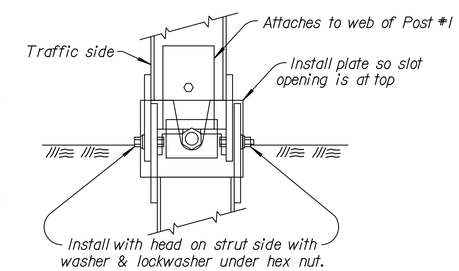

VIEW G-G (Post #1)

◆ Note: Apply retroreflective sheeting to the buffer end of terminal after installation. Throughly clean and dry steel prior to installation. Locate sheeting to provide maximum visibility to approaching traffic.

NO.	DATE	REVISIONS	BY	APP'D
3				
2				
1	12-14-10	Rev. notes, details & 28" rail height	S.W.K	J.O.B.

KANSAS DEPARTMENT OF TRANSPORTATION

GUARDRAIL END TERMINAL (SRT) (FLARED)

RD621A

FHWA APPROVAL	1-11-11	APP'D. James O. Brewer	
DESIGNED	DETAILED	QUANTITIES	TRACED Bowser
DESIGN CK.	DETAIL CK.	QUAN.CK.	TRACE CK. King

KDOT Graphics Certified 04-03-2014

KDOT Graphics Certified

Drawn By : bblizzard Plotted : 7/21/2015
File : G:\12902\MicroHighways\12902R2122-rd621a.dgn

STATE	PROJECT NO.	YEAR	SHEET NO.	TOTAL SHEETS
KANSAS	52 C-4611-01	2015	10	64

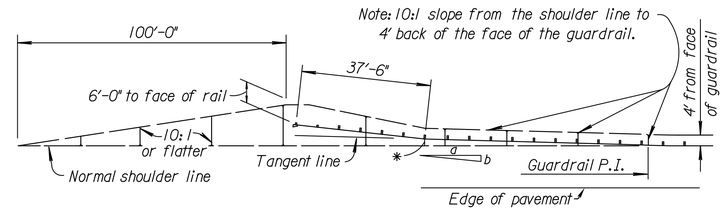

* "K" is the distance shown on guardrail tabulations and is measured at the beginning of the 37'-6" terminal section.

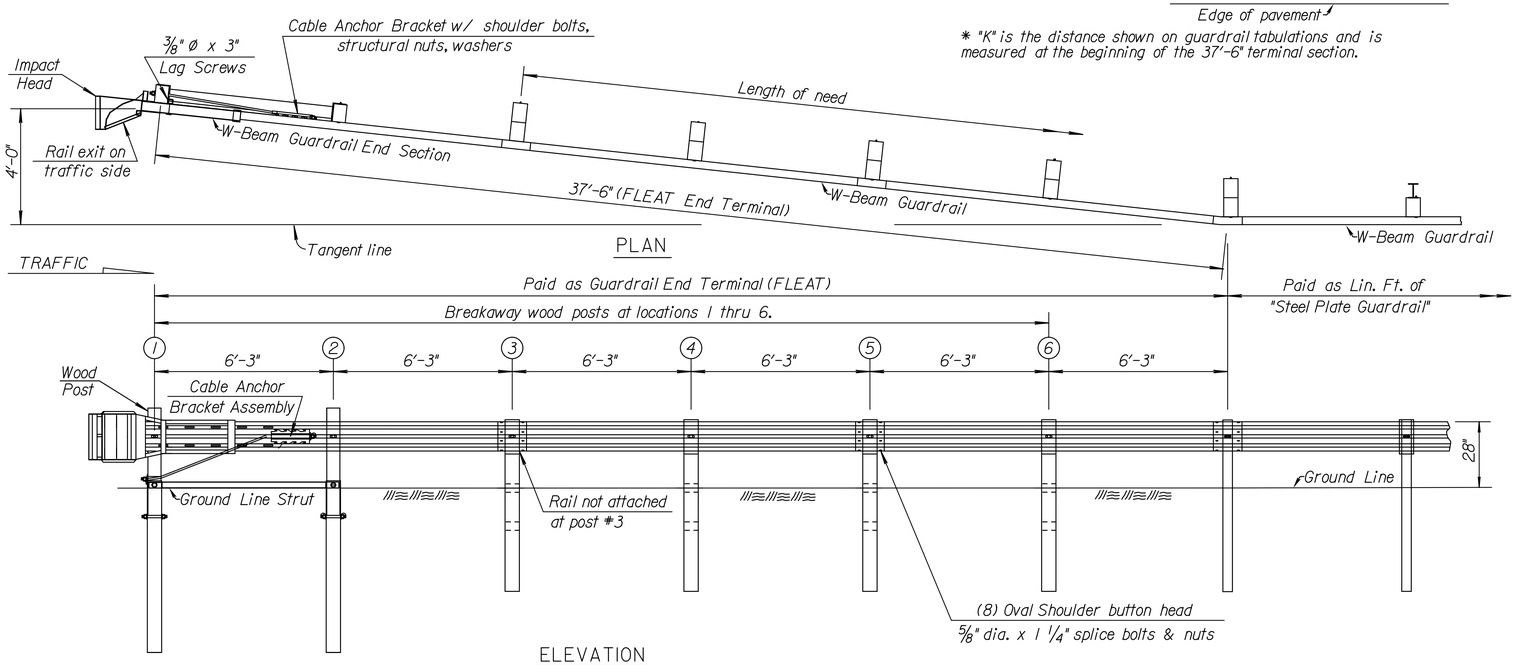

GENERAL NOTES

Use approved wood (shown & described) or steel posts ① through ⑥ on the (FLEAT) provided by the manufacturer. Terminal post type used is independent of post type used on the remainder of the installation. No mixing of post types allowed in guard fence run.

Lap guardrail splices, including terminal connector, in the direction of traffic. Where traffic is temporarily carried in the opposite direction of final configuration, lap rail splices in the direction of permanent traffic.

Drive the steel soil tubes with an approved driving head. Do not drive steel tubes with wood post in the tube. Backfill and satisfactorily compact around steel tubes placed in drilled holes to prevent tube settlement.

The soil tubes should not protrude more than 4" above ground (measured along a 5'-0" cord). If necessary grade the site to meet this requirement.

When rock is encountered during installation, see Manufacturer's Installation Manual for procedure.

The cable anchor assembly must be taut. Use a locking device, (vice grips or channel lock pliers) to prevent the cable from twisting when tightening the nuts.

Apply retroreflective sheeting as shown on the face of the impact head prior to installation. Thoroughly clean and dry steel prior to applying sheeting.

Galvanize all steel parts after fabrication.

All work and materials required for installation of this terminal are paid under the bid item "Guardrail End Terminal (FLEAT)".

End Terminal (FLEAT) details shown on this sheet are for "Information Only" and may not be an exact detail. See Manufacturer's Installation Manual (furnished to Engineer) for component details and installation instructions.

See Standard Drawings RD611or RD613 for guardrail details not shown.

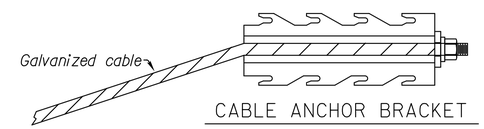

CABLE ANCHOR BRACKET

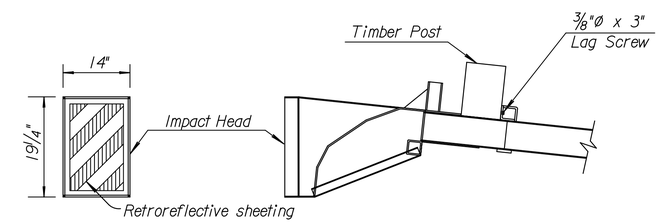

IMPACT HEAD CONNECTING DETAIL

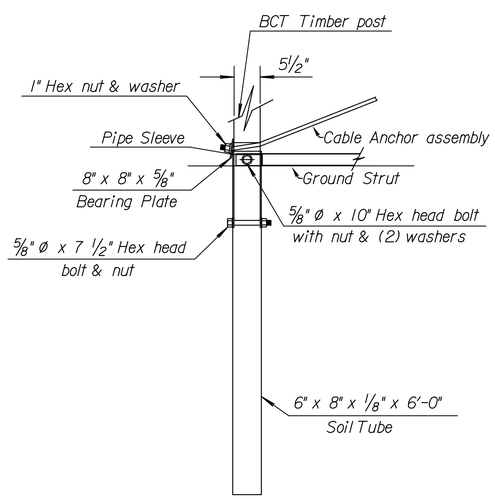

PARTIAL VIEW OF POST 1

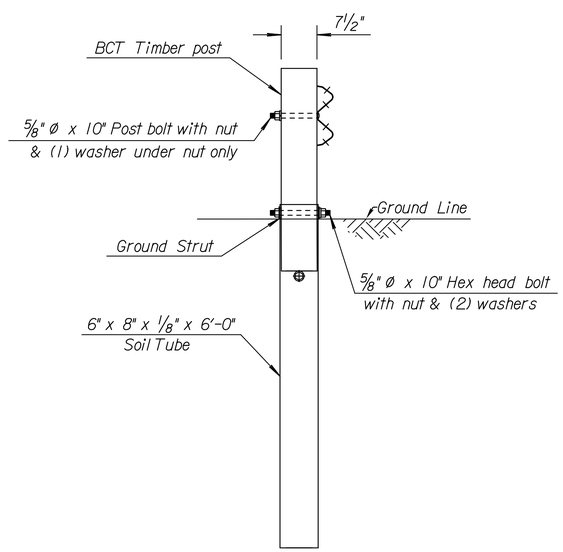

DETAIL OF POST #2

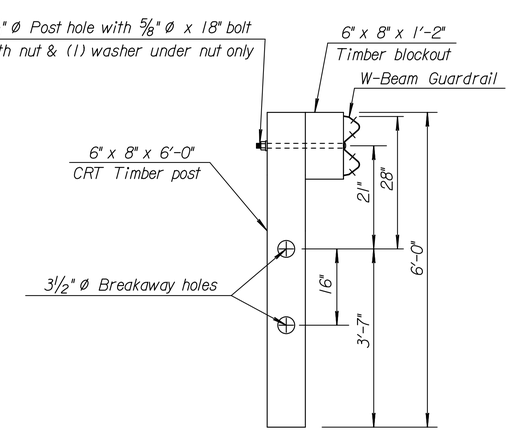

DETAIL OF POSTS
(#3 through #7)

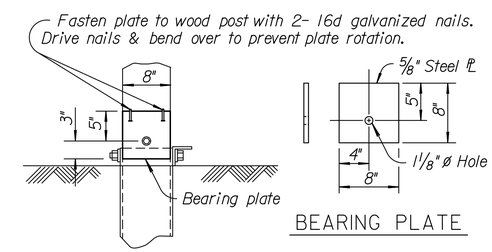

BEARING PLATE

Orient bearing plate as shown with the hole 5" from the top.

NO.	DATE	REVISIONS	BY	APP'D
3				
2				
1	12-15-10	Revised notes, 28" rail height	S.W.K.	J.O.B.

KANSAS DEPARTMENT OF TRANSPORTATION

GUARDRAIL END TERMINAL FLEAT

RD606B

FHWA APPROVAL	1-11-11	APP'D. James O. Brewer	
DESIGNED	DETAILED	QUANTITIES	TRACED Bowser
DESIGN CK.	DETAIL CK.	QUAN.CK.	TRACE CK. King

KDOT Graphics Certified 01-31-2011

KDOT Graphics Certified

Drawn By : bblizzard
File : G:\12902\Micro\Highways\12902R2123-rd606b.dgn
Plotted : 7/21/2015

STATE	PROJECT NO.	YEAR	SHEET NO.	TOTAL SHEETS
KANSAS	52 C-4611-01	2015	11	64

Need 606H X-LITE standard to replace ET-PLUS

NO.	DATE	REVISIONS	BY	APP'D
11	12-08-10	Revised notes, 28" rail height	S.W.K.	J.O.B.
10	5-10-04	Rev. term. from (LET to ET PLUS)	S.W.K.	J.O.B.
9	8-24-00	Added note Long Rail Element	R.J.S.	J.O.B.

KANSAS DEPARTMENT OF TRANSPORTATION

GUARDRAIL END TERMINAL (ET PLUS)

RD606

FHWA APPROVAL	1-11-11	APP'D. James O. Brewer	
DESIGNED	DETAILED	QUANTITIES	TRACED Bowser
DESIGN CK.	DETAIL CK.	QUAN.CK.	TRACE CK. King

Drawn By : bblizzard
File : G:\12902\Micro\Highways\12902R2103-rd606.dgn
Plotted : 7/21/2015

STATE	PROJECT NO.	YEAR	SHEET NO.	TOTAL SHEETS
KANSAS	52 C-4611-01	2015	12	64

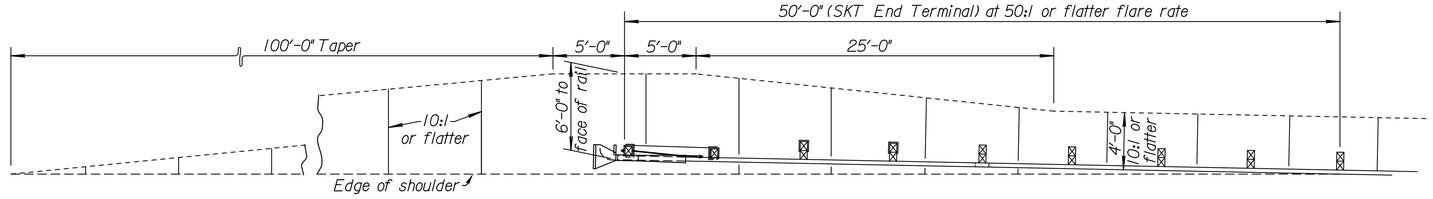

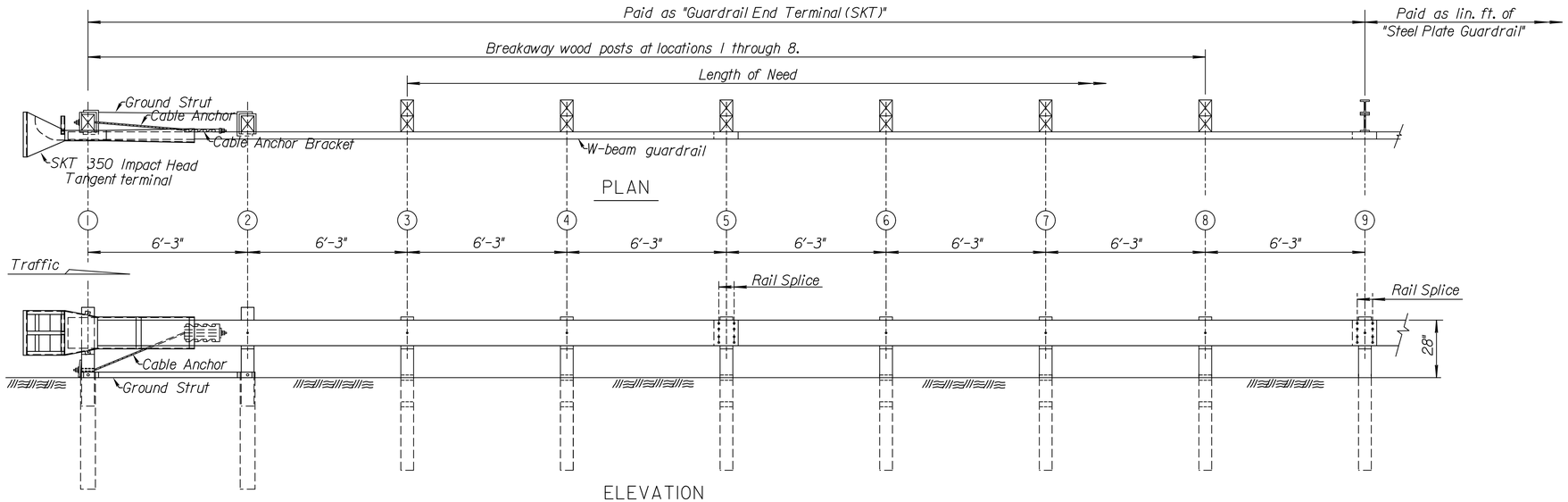

Note: Installation of 12'-6" rail elements (Contractor's option) instead of 25'-0" long rail elements are acceptable.

GENERAL NOTE

Use approved wood (shown & described) or steel posts ① through ⑦ on the (SKT) provided by the manufacturer. Terminal post type used is independent of post type used on the remainder of the installation. No mixing of post types allowed in guard fence run.

Lap guardrail splices, including terminal connector, in the direction of traffic. Where traffic is temporarily carried in the opposite direction of final configuration, lap rail splices in the direction of permanent traffic.

All steel parts shall be galvanized after fabrication.

Install retroreflective sheeting as shown on the face of the extruder prior to installations. Thoroughly clean and dry extruder prior to applying sheeting.

The cable anchor assembly must be taut. Use a locking device, (vice grips or channel lock pliers) to prevent the cable from twisting when tightening the nuts.

The soil tubes should not protrude more than 4" above ground (measured along a 5'-0" cord). Site grading may be necessary to meet this requirement.

The steel tubes may be driven with an approved driving head. Do not drive steel tubes with wood post in the tube. Backfill and satisfactorily compact around steel tubes placed in drilled holes to prevent tube settlement.

When rock is encountered during installation, see standard specifications for procedure.

All work and materials required for installation of this terminal shall be paid under the bid item "Guardrail End Terminal (SKT)".

End Terminal (SKT) details shown on this sheet are for "Information Only" and may not be an exact detail. See Manufacturer's Installation Manual (furnished to Engineer) for component details and installation instructions.

See RD611 & RD613 for details of guardrail not shown.

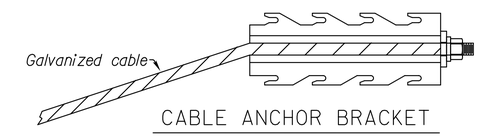

CABLE ANCHOR BRACKET

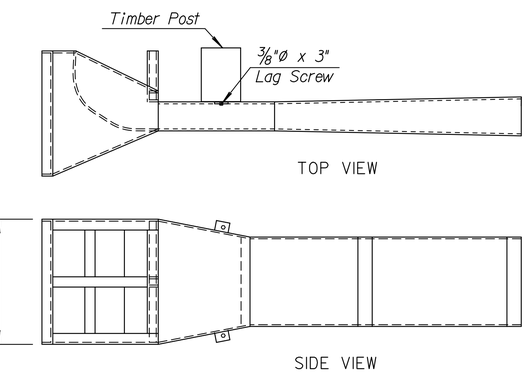

DETAILS OF IMPACT HEAD

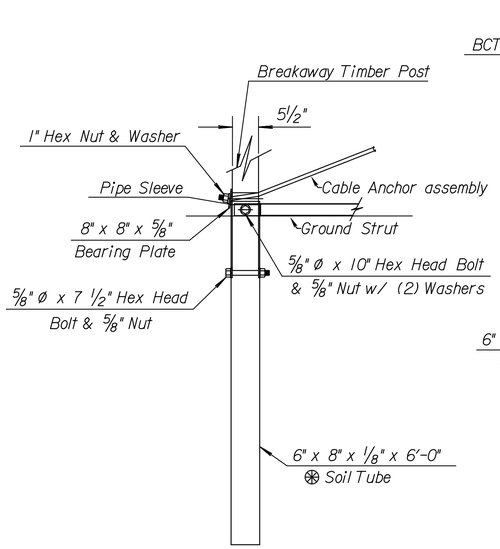

PARTIAL VIEW OF POST #1

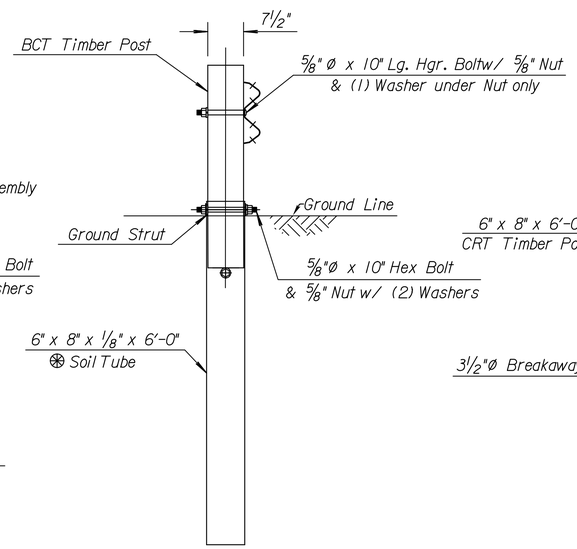

DETAIL OF POST #2

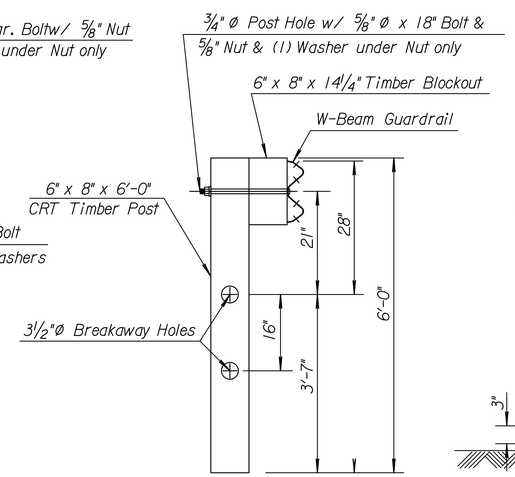

DETAIL OF POSTS
(#3 through #8)

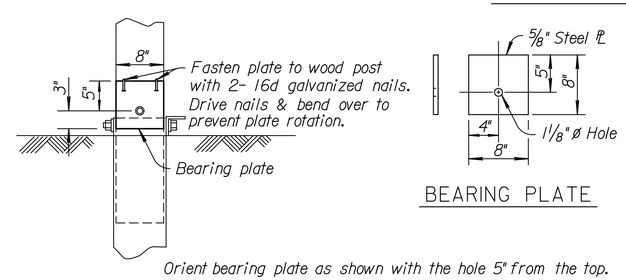

BEARING PLATE

Orient bearing plate as shown with the hole 5" from the top.

⊛ Optional 4'-6" or 5'-0" tube w/soil plate may be used as per the manufacturer's specifications.

NO.	DATE	REVISIONS	BY	APP'D
3				
2				
1	12-14-10	Revised notes, 28" rail height	S.W.K.	J.O.B.

KANSAS DEPARTMENT OF TRANSPORTATION

GUARDRAIL END TERMINAL (SKT)

RD606C

FHWA APPROVAL	1-11-11	APP'D. James O. Brewer	
DESIGNED	DETAILED	QUANTITIES	TRACED Bowser
DESIGN CK.	DETAIL CK.	QUAN.CK.	TRACE CK. King

KDOT Graphics Certified 02-14-2011

KDOT Graphics Certified

Drawn By : bblizzard
File : G:\12902\Micro\Highways\12902R2104-rd606c.dgn
Plotted : 7/21/2015

STATE	PROJECT NO.	YEAR	SHEET NO.	TOTAL SHEETS
KANSAS	52 C-4611-01	2015	13	64

Side View

Flexible Guardrail Marker
One-Way Traffic

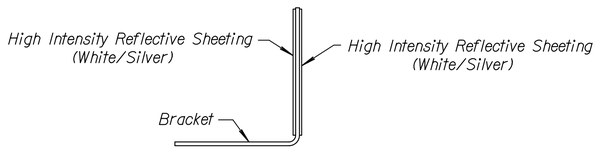

Side View

Flexible Guardrail Marker
Two-Way Traffic

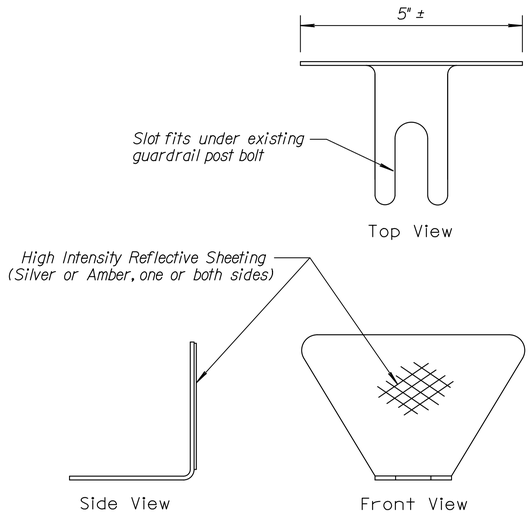

Flexible Guardrail Marker

(High Impact Polycarbonate approx. .085" thick, 5¼" x 3")

General Notes

Install markers on the traffic side of all guardrail installations. Do not exceed 25 foot spacing on markers. No marker is installed between the head and post #5 when the guardrail is terminated with a crashworthy end terminal. Install flexible markers on a post behind guardrail bolt head.

Install flexible markers on the top of bridge rails at a spacing not to exceed 50' except for long bridges (greater than 200' long) where spacing may increased to 100'.

On two-way roadways use flexible markers with white/silver high intensity reflective sheeting on both sides.

On one-way or divided roadways use flexible markers installed on the approach traffic side of bracket only. Use marker color yellow/amber on the left side of roadway and white/silver on the right side of the roadway.

Use High Impact Polycarbonate Flexible Guardrail Marker with High Intensity Reflective Sheeting AKT Marker or approved equivalent marker, see Standard Specifications.

Use zinc or cadmium plated fasteners that complies with Standard Specifications.

Work and materials required for installation of markers on guardrail/bridge rail are Subsidiary to the bid item "Steel Plate Guardrail".

Install flexible markers for the final (permanent) traffic configuration on projects with staged construction. For example a divided highway with one side closed and two-way traffic during construction.)

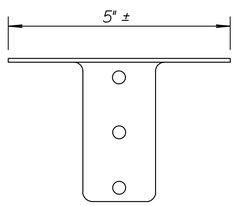

Top View

Barrier/Bridges

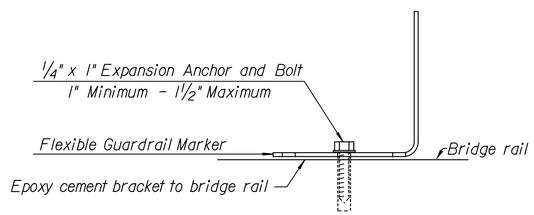

Side View

Method of Attaching Flexible Guardrail Marker to Bridge Rail

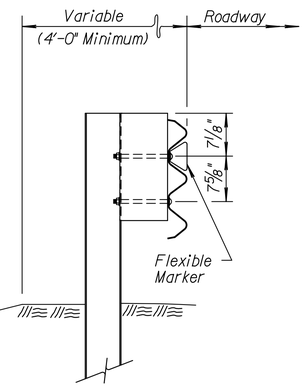

Flexible Marker Mounting on Thrie Beam Guardrail

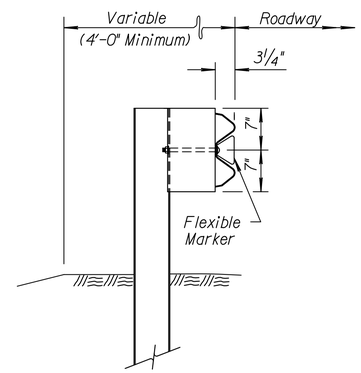

Flexible Marker Mounting on W-Beam Guardrail

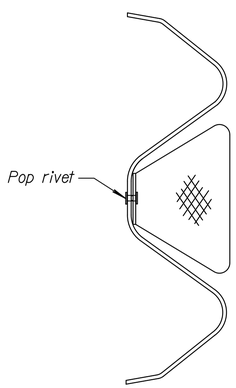

Typical Mounting on W-Beam

Pop rivet attachment to Guardrail when necessary.

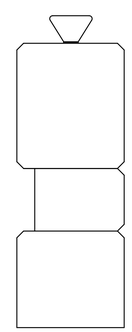

Typical Mounting on Corral Rail

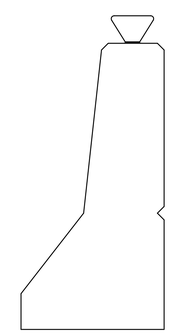

Typical Mounting on Barrier Curb Bridge Rail

NO.	DATE	REVISIONS	BY	APP'D
8	11-15-10	Revised notes	S.W.K.	J.O.B.
7	12-21-08	AKT marker or approved equal	S.W.K.	J.O.B.
6	3-10-09	Add. Flexible rem. Button deline	S.W.K.	J.O.B.
5	7-20-04	Changed Guard Fence to Guardrail	S.W.K.	J.O.B.

KANSAS DEPARTMENT OF TRANSPORTATION

MARKER DETAILS FOR GUARDRAIL AND BRIDGE RAILS

RD610

FHWA APPROVAL	1-11-11	APP'D. James O. Brewer	
DESIGNED	DETAILED	QUANTITIES	TRACED Bowser
DESIGN CK.	DETAIL CK.	QUAN.CK.	TRACE CK. King

KDOT Graphics Certified 02-03-2011

KDOT Graphics Certified

Drawn By : bblizzard
File : G:\12902\Micro\Highways\12902R2105-rd610.dgn
Plotted : 7/21/2015

STATE	PROJECT NO.	YEAR	SHEET NO.	TOTAL SHEETS
KANSAS	52 C-4611-01	2015	14	64

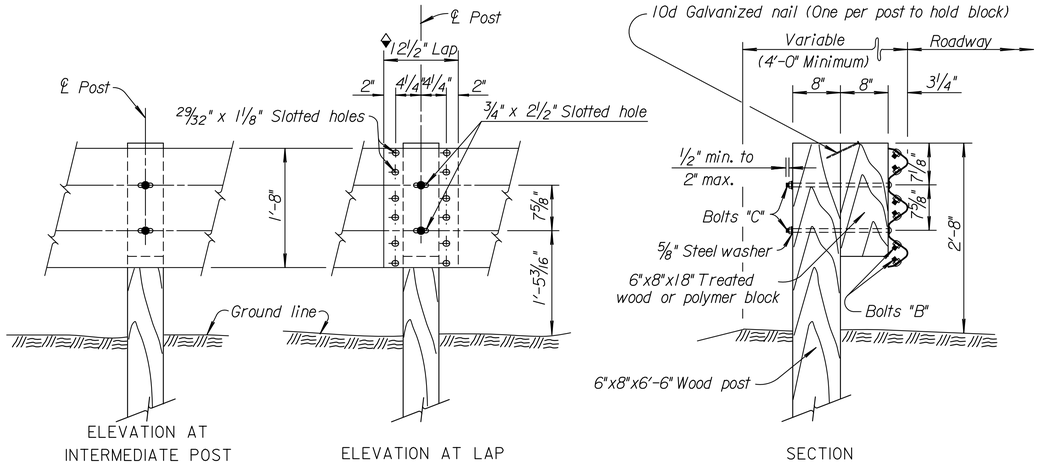

ELEVATION AT INTERMEDIATE POST — ELEVATION AT LAP — SECTION

THRIE BEAM POST DETAILS

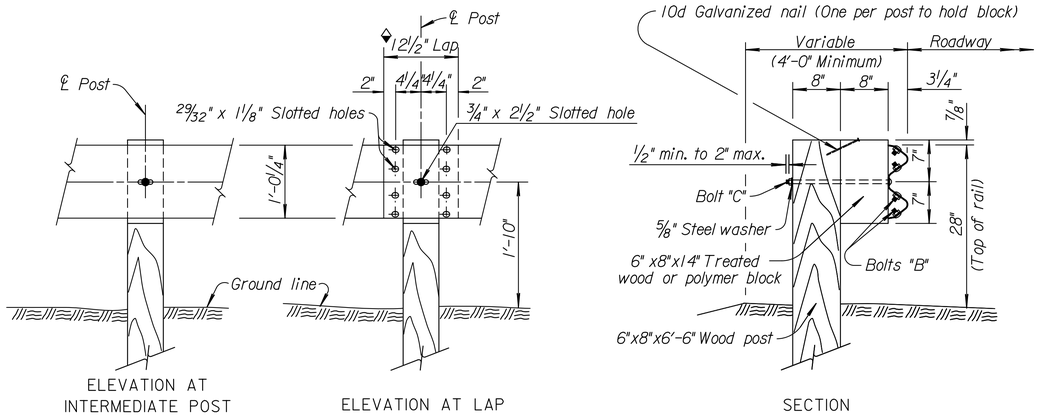

ELEVATION AT INTERMEDIATE POST — ELEVATION AT LAP — SECTION

W-BEAM POST DETAILS

◆ Lap guardrail splices, including terminal connector, in the direction of traffic. Where traffic is temporarily carried in the opposite direction of final configuration, lap rail splices in the direction of permanent traffic.

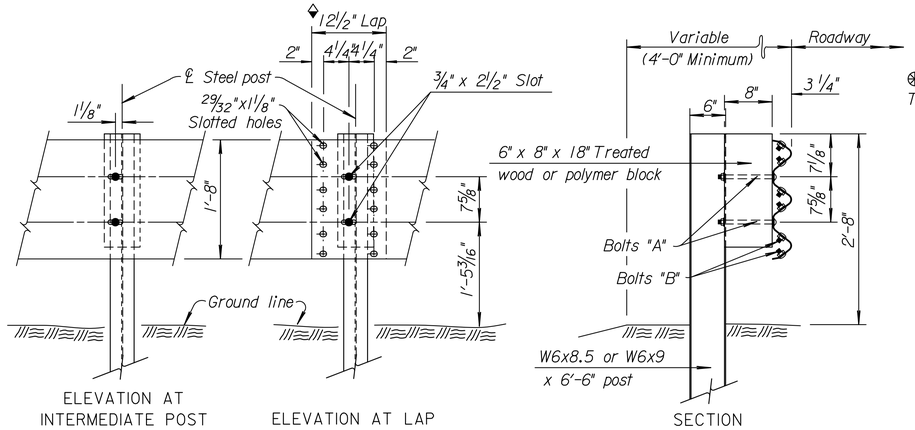

ELEVATION AT INTERMEDIATE POST — ELEVATION AT LAP — SECTION

THRIE BEAM POST DETAILS

◆ Lap guardrail splices, including terminal connector, in the direction of traffic. Where traffic is temporarily carried in the opposite direction of final configuration, lap rail splices in the direction of permanent traffic.

⊛ See Standard Drawing RD613 for Thrie Beam Transition Section Blockout hole pattern.

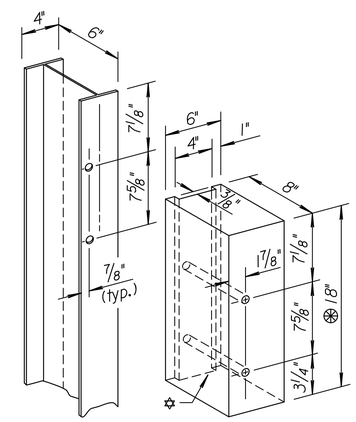

Note: All holes 13/16" dia.

THRIE BEAM HOLE PUNCHING DETAILS

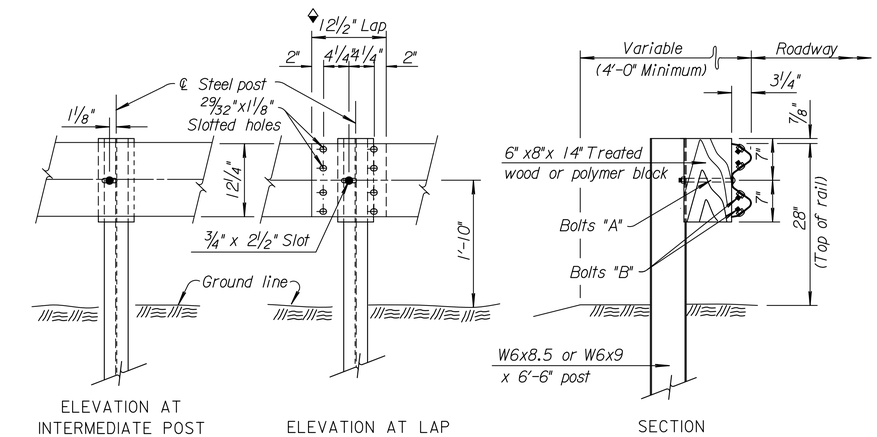

ELEVATION AT INTERMEDIATE POST — ELEVATION AT LAP — SECTION

W-BEAM POST DETAILS

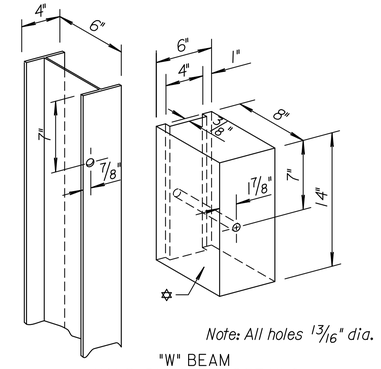

Note: All holes 13/16" dia.

"W" BEAM HOLE PUNCHING DETAILS

✡ NON-METALLIC (POLYMER) or TREATED WOOD BLOCK

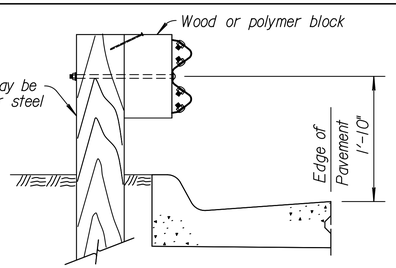

Note: When face of guardrail is aligned with the face of a curb, measure the height of rail from the pavement surface at the curb/pavement joint as shown.

Use a laydown type curb where the face of the guardrail is not located at the face of the curb.

DETAIL OF PLACEMENT AT CURB

WOOD POSTS

GENERAL NOTES (Wood Posts)

Give all wood posts and wood blocks a preservative treatment, see standard specifications. Thoroughly saturate all cuts, injuries and bolt holes on wood posts and blocks with preservative. Use only one type of preservative treatment on a project.

Use S4S rectangular posts and wood blocks, see standard specifications. Use only one post/blockout type within guardrail run, this excludes the the guardrail end terminals.

Set guardrail posts by digging or by driving. Use post caps to protect the post from crushing during driving operations.

Contractor must notify Engineer at the earliest time when a non-removable man-made object (footing, pipe, etc.) is encountered and prevents installation of a full length post. Contractor must obtain Engineer approval prior to cutting post shorter than 6'-6".

Approved polymer blockouts may be substituted for wood blockouts. Only one type of blockout is permitted on each guardrail installation. This excludes the guardrail end terminals unless certified by the manufacturer.

All dimensions are nominal and are subject to manufacturing tolerances.

Excavation including rock, shale, and other materials for erection of Guardrail is subsidiary to various bid items for which payment is made.

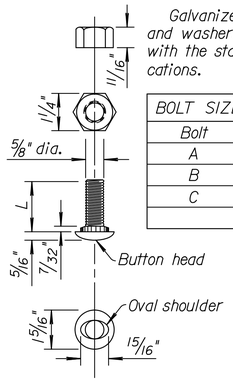

Galvanize all bolts, nuts, and washers in accordance with the standard specifications.

BOLT SIZE SCHEDULE	
Bolt	L
A	8 1/2"
B	1 1/4"
C	18"

BOLT & NUT DETAILS

STEEL POSTS

GENERAL NOTES (Steel Posts)

Use grade of steel for steel posts that meets the requirements of the standard specifications.

Hot dip galvanize the posts after fabrication, see standard specifications.

Use only one post/blockout type within guardrail run, this excludes the guardrail end terminals. For wood/polymer blockout requriements see standard specifications.

Approved polymer blockouts may be substituted for wood blockouts. Only one type of blockout is permitted on each guardrail installation. This excludes the guardrail end terminals.

Set guardrail posts by digging or by driving. Use post caps to protect the post from crushing during driving operations.

Contractor must notify Engineer at the earliest time when a non-removable man-made object (footing, pipe, etc.) is encountered and prevents installation of a full length post. Contractor must obtain Engineer approval prior to cutting post shorter than 6'-6" except as allowed on Standard Drawing RD617.

All dimensions are nominal and are subject to manufacturing tolerances.

Excavation including rock, shale, and other materials for erection of Guardrail is subsidiary to various bid items for which payment is made.

For details of guardrail attachment to bridge wings see sheet 31

NO.	DATE	REVISIONS	BY	APP'D
12	12-14-10	Revised notes, 28" w-beam rail height	S.W.K.	J.O.B.
11	6-30-04	Remove steel blockout and notes	S.W.K.	J.O.B.
10	7-15-02	Add polymer block-out alternate	S.W.K.	J.O.B.

KANSAS DEPARTMENT OF TRANSPORTATION

GUARDRAIL POST DETAILS

~~RD611~~

FHWA APPROVAL	1-11-11	APP'D. James O. Brewer	
DESIGNED	DETAILED	QUANTITIES	TRACED Bowser
DESIGN CK.	DETAIL CK.	QUAN.CK.	TRACE CK. Kling

KDOT Graphics Certified 02-14-2011

KDOT Graphics Certified

Drawn By : bblizzard
File : G:\12902\Micro\Highways\12902R2106-rd611.dgn
Plotted : 7/21/2015

STATE	PROJECT NO.	YEAR	SHEET NO.	TOTAL SHEETS
KANSAS	52 C-4611-01	2015	15	64

Note: Guardrail is shown with wood posts. However the contractor has the option of providing wood or steel posts. See Standard Drawing RD611 for details.

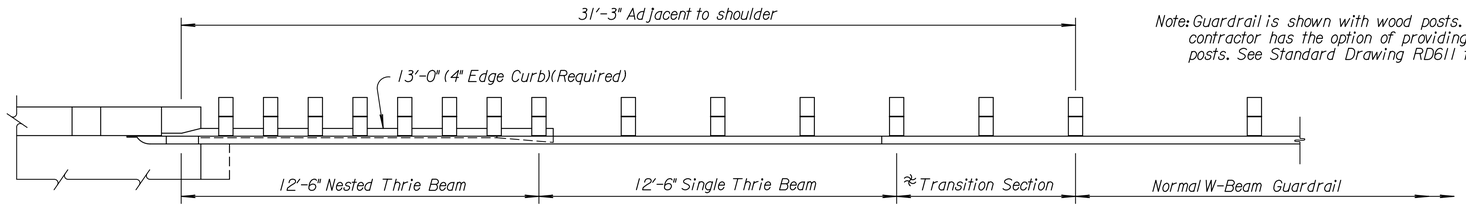

PARTIAL PLAN

≈ This Section is omitted for Std. Drawing RD607 and RD607A.

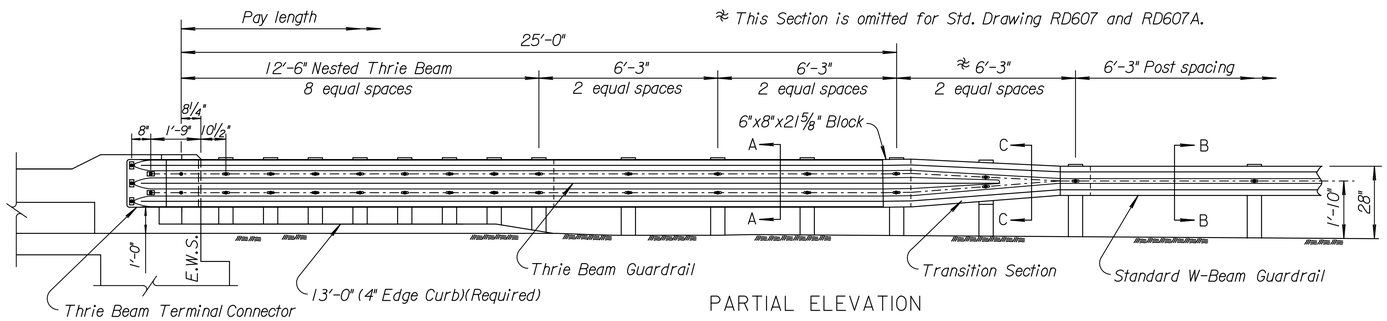

PARTIAL ELEVATION

GENERAL NOTE

Use galvanized 12 gauge steel rail elements unless otherwise noted. Use galvanized anchor bolts and post rail fittings, see Standard Specifications. Supply guard rail parts that are interchangeable with similar parts regardless of source or manufacturer.

Fabricate Terminal Connector from 10 gauge steel, see standard specification. The connector has the same section as thrie beam guardrail Terminal connector is subsidiary to the bid item "Steel Plate Guardrail".

Shop curve rails when radius is less than 150'.

Lap guardrail splices, including terminal connector, in the direction of traffic. Where traffic is temporarily carried in the opposite direction of final configuration, lap rail splices in the direction of permanent traffic.

Bridge to guardrail transition consists of 1- 25'-0" Thrie beam with 1- 12'-6" Thrie beam section nested in back of 25'-0" section (see layout), & 1- Thrie beam to W-beam Asymmetrical transition section. Use associated hardware with post spacing shown. Use w-beam guardrail with 6'-3" post spacing with rail furnished in 12'-6" or 25'-0" sections.

All material and work required for this installation are paid under the bid item "Steel Plate Guardrail".

For details of guardrail attachment to bridge wings see sheet 31

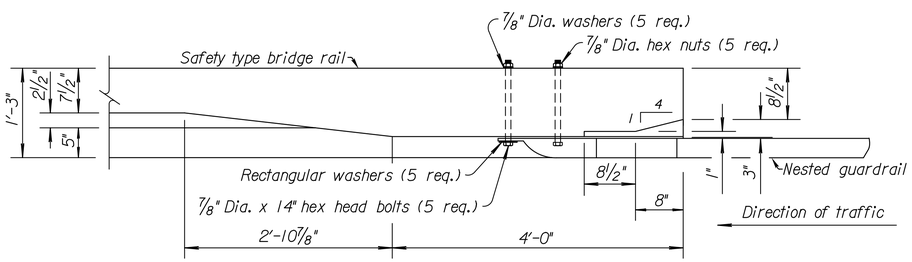

PLAN VIEW

GUARDRAIL ATTACHMENT
TO SAFETY SHAPE BRIDGE RAIL

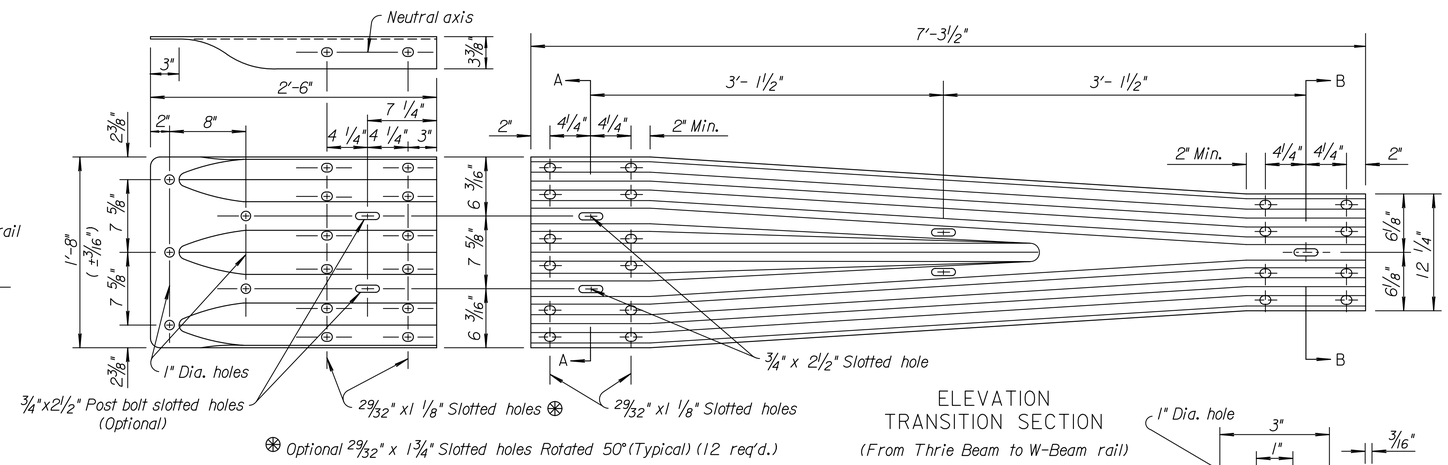

TERMINAL CONNECTOR

ELEVATION
TRANSITION SECTION
(From Thrie Beam to W-Beam rail)

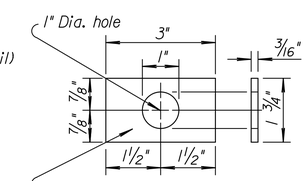

RECTANGULAR WASHER
(Other approved washer may be used.)

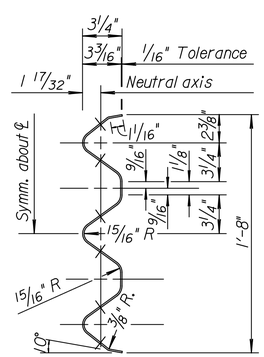

SECTION A-A THRU RAIL ELEMENT
TYPICAL THRIE BEAM

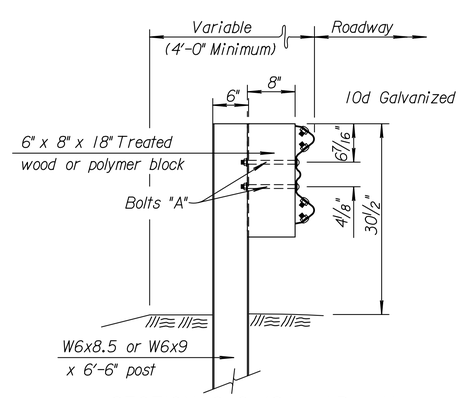

SECTION C-C (Steel Post)

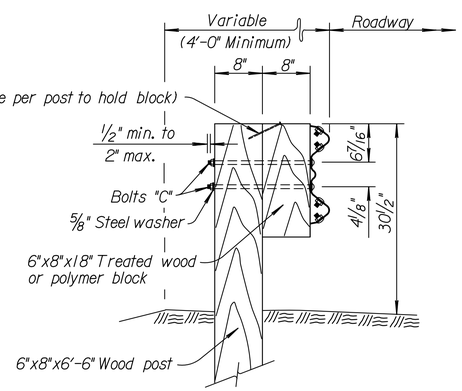

SECTION C-C (Wood Post)

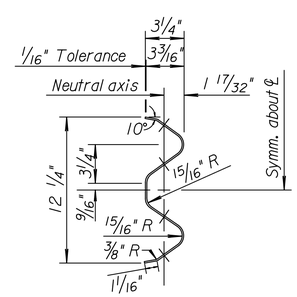

SECTION B-B THRU RAIL ELEMENT
TYPICAL W-BEAM

NO.	DATE	REVISIONS	BY	APP'D
13	12-06-10	Rev. Sec. C-C, notes & 28" rail height	S.W.K.	J.O.B.
12	07-02-09	Rev. Safety Shape Br. Rail detail	S.W.K.	J.O.B.
11	01-05-04	Added 4" Edge Curb, revised note	S.W.K.	J.O.B.

KANSAS DEPARTMENT OF TRANSPORTATION

DETAILS OF THRIE BEAM GUARDRAIL TRANSITION

~~RD613~~

FHWA APPROVAL	1-11-11	APP'D. James O. Brewer	
DESIGNED	DETAILED	QUANTITIES	TRACED Bowser
DESIGN CK.	DETAIL CK.	QUAN.CK.	TRACE CK. King

KDOT Graphics Certified 01-31-2011

KDOT Graphics Certified

Drawn By : bblizzard Plotted : 7/21/2015
File : G:\12902\MicroHighways\12902R2107-rd613.dgn

STATE	PROJECT NO.	YEAR	SHEET NO.	TOTAL SHEETS
KANSAS	52 C-4611-01	2015	16	64

SUMMARY OF QUANTITIES

Item / Location	Excavation Class I Cu. Yds.	Excavation Class II Cu. Yds.	Concrete (Grade 4.0)(AE)(SA) Cu. Yds.	Concrete (Grade 4.0)(AE) Cu. Yds.	Reinforcing Steel (Grade 60)(Epoxy Coated) Lbs.	Reinforcing Steel (Grade 60) Lbs.	Prestressed Box Beam (27"x48") Lin. Ft.	Piles (Steel) (HP12x53) Lin. Ft.	Cast Steel Pile Point Each	Prestressed Concrete Panels Sq. Ft.	Bridge Backwall Prot. System Sq. Yds.	Abutment Aggregate Drain Cu. Yds.	Bridge Deck Grooving Sq. Yds.	Slope Protection (Riprap Stone)(24") Cu. Yds.	Bedding for Slope Protection Cu. Yds.
Abutment No. 1	67	67	**	30.2	**	1,680		135	5		55	34		74	31
Abutment No. 2	36	89	**	29.5	**	1,680		130	5		55	34		97	42
Substr. Total	103	156		59.7		3,360		265	10		110	68		171	72
Superstr. Total			75.8		21,820		148			770			141		
Total	103	156	75.8	59.7	21,820	3,360	148	265 †	10	770	110	68	141	171	72

** Quantities are included in the Superstr. Total Quantity.

† Summary of Piling
Abutment No. 1 5 @ 27 ft.
Abutment No. 2 5 @ 26 ft.

NOTE: Only steel pile HP12x53 shall be used on this project.

INDEX OF BRIDGE DRAWINGS

Sheet No.	Drawing
16	General Notes and Quantities
17	Contour Map
18	Construction Layout
19	Engineering Geology
20	Engineering Geology
21	Abutment Details
22	Abutment Details
23	Abutment Details
24	Abutments Aggregate Drain
25	Framing Plan
26	Prestressed Box Beam Details
27	Prestressed Box Beam Details
28	Prestressed Concrete Panel Details
29	Slab Plan & Section
30	32" Kansas Corral Rail (Without Curb)
31	Details of Thrie Beam Guardrail at Wingwall
32	Bill of Reinforcing Steel & Bending Diagrams
	Standards
33	Bridge Excavation
34	Standard Pile Details
35	Supports and Spacers for Reinforcing Steel

GENERAL NOTES

EXISTING STRUCTURE: Plans of the existing structure are on file and available for inspection by qualified bidders at the Leavenworth County Public Works, Leavenworth County Courthouse, 300 Walnut Street, Suite 007 Leavenworth, KS.

EMBANKMENT: Complete the embankment at the abutments as shown on the Bridge Excavation sheet prior to driving the abutment piling.

BRIDGE EXCAVATION: Elevation 894.60 shall designate the Excavation Boundary Plane of Class I and Class II Excavation; Class I above the plane, Class II below the plane. See the Bridge Excavation sheet for the limits of pay excavation.

BACKFILL COMPACTION: Backfill compaction shall be required at abutments.

PILING: Drive all piling to [penetrate or bear upon the Lawrence formation](or)[a minimum elevation of 871.0]. Driving shall stop when in the opinion of the Engineer additional driving may damage the piling. Drive all piling to the Pile Driving Formula Load of:

Abutment No. 1 93 Tons
Abutment No. 2 93 Tons

As a minimum drive each pile to the load and penetration, but in no case shall the pile be driven to more than 110% of Pile Driving Formula Driving Load. At any location where problems are experienced, pile damage is suspected, or the Pile Driving Formula Load occurs significantly above the design pile tip elevation, the Engineer may request that the Pile Driving Analyzer (PDA) equipment be used.

CONCRETE: Superstructure concrete is bid as Concrete (Grade 4.0)(AE)(SA). Substructure concrete is bid as Concrete (Grade 4.0)(AE). If desired, the Contractor may use Concrete (Grade 4.0) in the footings and in the abutments below the construction joint. Bevel all exposed edges of all concrete with a 3/4" triangular molding, except where noted on the plans. Construction joints are optional, but if used, place only at locations shown, or at locations approved by the Engineer.

REINFORCING STEEL: All reinforcing steel dimensions are to the centerline of bars unless otherwise noted. All reinforcing steel, except the spiral bars, shall conform to the requirements of ASTM A615, Grade 60. Spiral bars may meet the requirements of either ASTM A615 (Gr. 40 or 60) or A82, and are included in the bid item "Reinforcing Steel (Gr. 60)".

DIMENSIONS: All dimensions shown on the design plans are horizontal dimensions unless otherwise noted. Make necessary allowances for roadway grade and cross slope.

CAMBER: Construct the finished deck to plan grade by varying the depth of the fillet over the beam to provide for prestress camber, concrete dead load deflection and, if necessary, vertical curvature. After the prestressed beams are erected measure the camber in the field by taking a profile of each beam. Correct any variation between the actual camber and concrete dead load deflection shown in the plans by varying the depth of the concrete fillets over the beam so that the finished floor is constructed to the theoretical grade. The minimum depth of the slab over the beam shall be 10 inches.

The theoretical amount of concrete required for the fillets is 3.9 Cu. Yds. This amount of concrete is included in the Summary of Quantities. Any additional concrete required to construct the fillets will be subsidiary.

PRESTRESSED BEAM CONCRETE: Use air entrained concrete with select course aggregate as specified in the KDOT Specifications. The release strength and 28 day strength requirements shall be as noted on the plans. Submit mix designs to the Engineer for approval.

ERECTION ELEVATION CHECKS: After the abutment concrete has cured and before setting any prestressed beams, present verification to the Engineer that the elevations at the bearings match plan elevation (± 1/4").

CONTRACTOR CONSTRUCTION STAKING: Contractor Construction Staking for clear span bridges requires two independent surveys. See KDOT Specifications.

ABUTMENT AGGREGATE DRAIN: See the General Notes on the "Abutment Aggregate Drain" sheet.

BRIDGE BACKWALL PROTECTION SYSTEM: See the General Notes on the "Abutment Aggregate Drain" sheet.

BROKEN CONCRETE: Waste the broken concrete from the existing bridge on sites provided by the Contractor and approved by the Engineer.

GOVERNMENT BENCH MARKS: If possible preserve any National Geodetic Survey bench marks that are located on the project. When preserved go to: http"//www.ngs.noaa.gov under Survey Mark Datasheets and submit condition report. If is not possible to preserve bench marks go to http://www.ngs.noaa.gov under Survey Mark Datasheets and submit destroyed report.

SLOPE PROTECTION (Riprap Stone): Place Slope Protection (Riprap Stone) to the limits and thicknesses shown on the plans or as directed by the Engineer. Use (Light 18") as described in Section 1114 placed to the limits shown on the plans.

GEOTECHNICAL REPORT: The geotechnical report is available for inspection by qualified bidders at the Leavenworth County Public Works.

CONCRETE PLACING SEQUENCE: Place and hand vibrate all concrete for the abutments above the construction joints to the bottom of the deck just prior to the normal paving train operations. Do this work in a manner to avoid a cold joint in either the abutments or in the diaphragms.

The Contractor may place the corral rail continuously from one end of the bridge to the other.

CONSTRUCTION LOADS: Limited traffic is permitted on the new sub-deck, one-course deck or any concrete overlay during the curing period, keep any exposed deck wet during the curing period. See KDOT Specifications Section 710 Tables 710-1 & 710-2 for additional information.

DEMOLITION PLANS Note: This is a Category A Demolition. Submit detailed Demolition Plans to the Field Engineer per KDOT Specifications. No Demolition work will begin without approved Demolition Plans. A Liscensed Professional Engineer is not required.

ERECTION PLANS: This is a Category A Structure. Submit detailed Erection Plans to the Field Engineer per KDOT Specifications. A Liscensed Professional Engineer is not required.

TEMPERATURE: The design temperature for all dimensions is 60°F.

QUANTITIES: Items not listed separately in the Summary of Quantities are subsidiary to other items in the proposal.

BRIDGE DECK GROOVING: After the bridge deck has cured, transversely groove the deck in accordance with KDOT Specifications. For phased construction groove each completed phase before opening to traffic. Align the grooves from each adjacent phase across the bridge deck without jogs or discontinuities. For skewed bridges all grooving will be perpendicular to the centerline of the bridge.

DESIGN DATA

DESIGN SPECIFICATIONS:
AASHTO Specifications, 2012 Edition and latest Interim Specifications. Load and Resistance Factor Design.

DESIGN LOADING:
HL-93

Design Dead Load includes an allowance of 15 psf for a future wearing surface.

UNIT STRESSES:

Concrete (Grade 4.0)	f'c =	4,000 psi
Concrete (Grade 4.0)(AE)	f'c =	4,000 psi
Concrete (Grade 4.0)(AE)(SA)	f'c =	4,000 psi
Prestressed Beam Concrete	f'c =	6,500 psi
Reinforcing Steel (Grade 60)	fy =	60 ksi
Steel Pile	fy =	50 ksi
Prestressed Strand	0.6" Ø Grade 270 uncoated 7-wire, low relaxation strand.	

LRFD DESIGN PILE LOAD:

Design Loading (Tons/Pile)	Strength	Service	Phi
Abutment 1 & 2	93	65	0.5

LFD & LRFR RATING FACTORS			
Truck / Rating Level		Inventory	Operating
HS-20	(36T)	1.15	2.27
Type HET	(110T)		1.08
2002 LFD Rating. 17th Edition AASHTO			
HL-93 Loading		1.46	1.89
2011 Manual for Bridge Evaluation			

NO.	DATE	REVISIONS	BY	APP'D
3				
2				
1				

KANSAS DEPARTMENT OF TRANSPORTATION
Br. No. 000521057303904 Sta. 13+20.28

GENERAL NOTES & QUANTITIES
CEMETERY ROAD OVER DAWSON CREEK
Proj. No. 52 C-4611-01 Leavenworth Co.

SHEET NO. OF	SCALE	APP'D	
DESIGNED	DETAILED	QUANTITIES	CADD
DESIGN CK.	DETAIL CK.	QUAN. CK.	CADD CK.

Plotted By: bblizzard Plot Location:
File: G:\2902\Micro\Bridge\2902R8601_001_Quans.dgn
Plot Date: 7/21/2015

STATE	PROJECT NO.	YEAR	SHEET NO.	TOTAL SHEETS
KANSAS	52 C-4611-01	2015	17	64

℄ Cemetery Road P.O.T. Sta. 10+00.00
N. 2,127,325.35 E. 380,077.83
I. Not Set

℄ Cemetery Road P.O.T. Sta. 16+98.35
N. 2,127,562.73 E. 380,734.26
I. Not Set

GBA #100 16.23' Rt., ℄ Sta. 15+54.97
Set 1/2" Bar and Cap along Easterly side of Cemetery Road.
1. N=380594.92 E=2127525.26
2. Mag nail and shiner in the NE face of power pole. 34.65' WNW
3. East edge asphalt Cemetery Road. 2.50' West
4. Mag nail East face power pole. 132.29' SW
5. Centerline North end existing bridge Cemetery road. 211.00' SSW

GBA #101 16.53' Lt., ℄ Sta. 10+44.18
Set 1/2" Bar and Cap along Westerly side of Cemetery Road.
1. N=380,124.89 E=2,127,323.00
2. Mag nail and shiner in the NE face of power pole. 49.64' WSW
3. 60D nail and shiner West face 15" Elm tree 49.63' South
4. Westerly edge gravel Cemetery Road. 3.45' East
5. Top centerline West end 42" C.M.P. under Cemetery Road. 18.00' NNE
6. Centerline North end existing Bridge Cemetery Road. 300.60' NE

Remove Br.No. 000521057303903
Steel Girder Bridge

℄ Cemetery Road
Curve Data

P.I. Sta. 11+72.44 (Bk.)	P.I. Sta. 14+65.95 (Bk.)
Δ = 3°19' 31" (RT)	Δ = 1°12' 27" (RT)
D = 11°27' 33"	D = 11°27' 33"
R = 500.00'	R = 500.00'
T = 14.51'	T = 5.27'
L = 29.02'	L = 10.54'
E = 0.21'	E = 0.03'

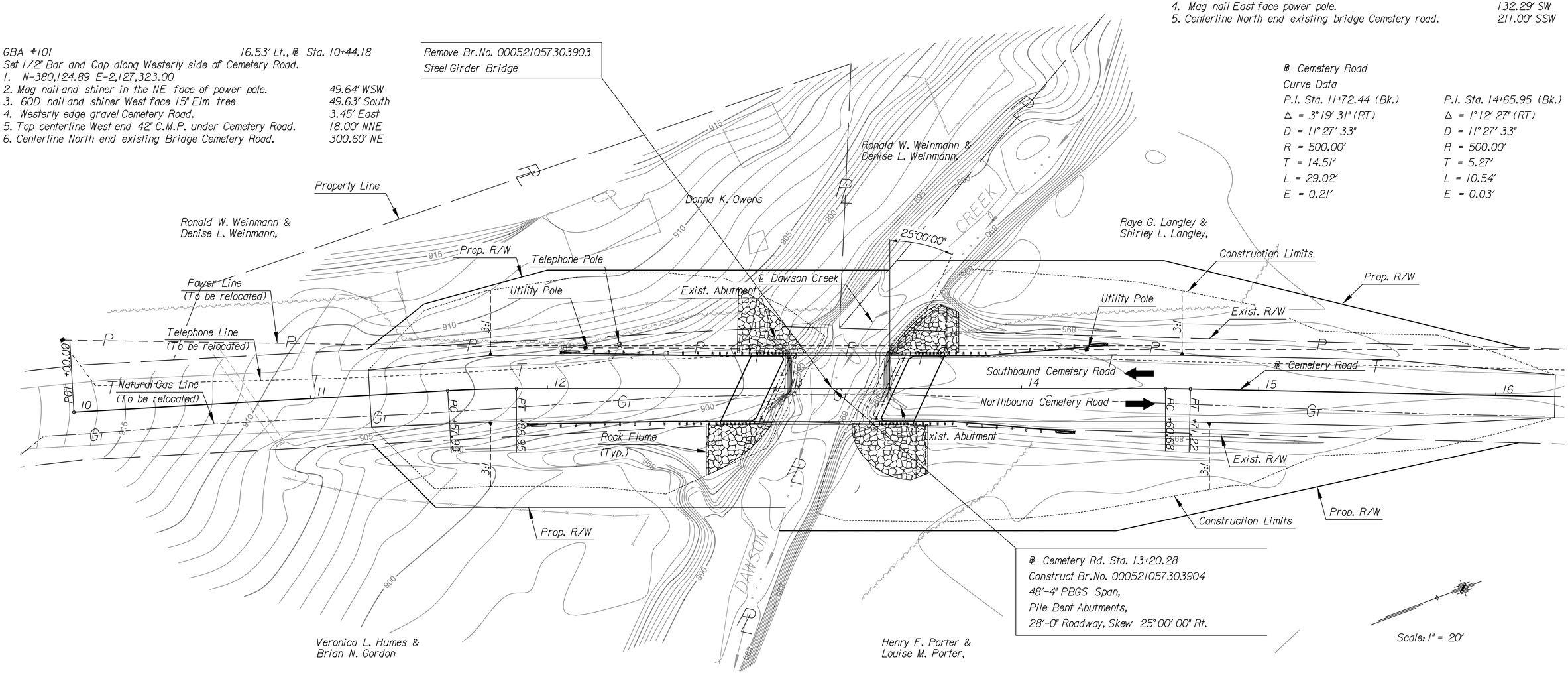

PLAN

Plotted By: bblizzard Plot Location:
File: G:\12902\Micro\Bridge\12902R8601_002_Commap.dgn
Plot Date: 7/21/2015

NO.	DATE	REVISIONS	BY	APP'D
3				
2				
1				

KANSAS DEPARTMENT OF TRANSPORTATION
Br. No. 000521057303904 Sta. 13+20.28

CONTOUR MAP
CEMETERY ROAD OVER DAWSON CREEK
Proj. No. 52 C-4611-01 Leavenworth Co.

SHEET NO. OF	SCALE	APP'D	
DESIGNED	DETAILED	QUANTITIES	CADD
DESIGN CK.	DETAIL CK.	QUAN. CK.	CADD CK.

STATE	PROJECT NO.	YEAR	SHEET NO.	TOTAL SHEETS
KANSAS	52 C-4611-01	2015	18	64

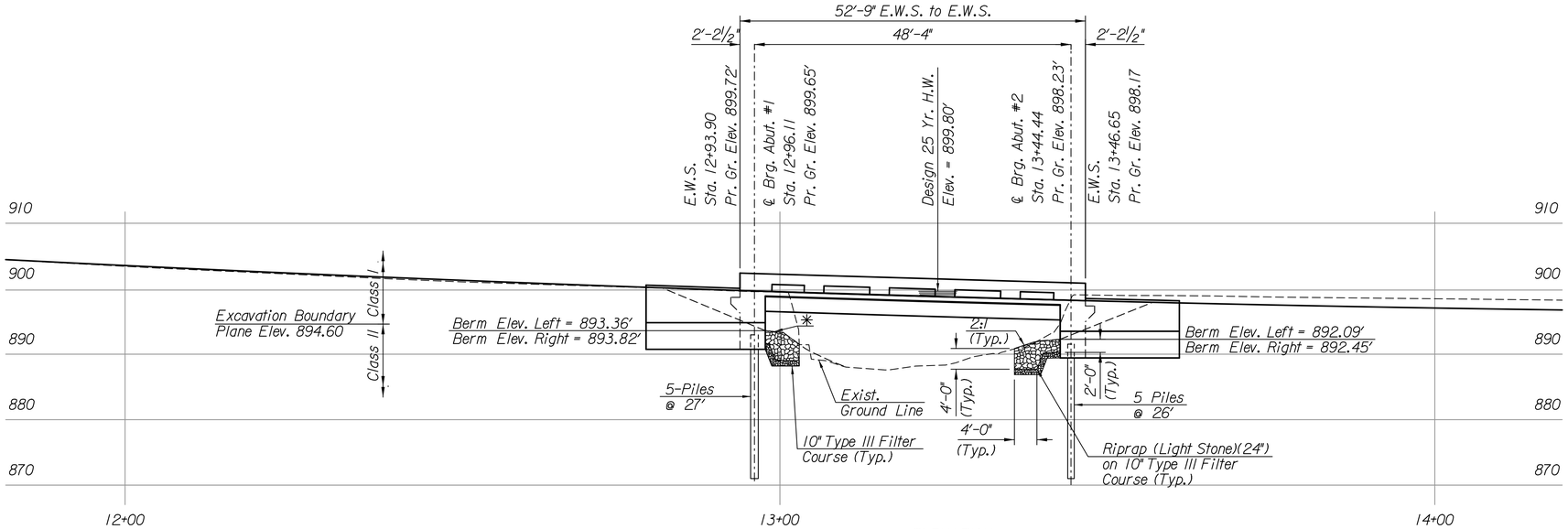

ELEVATION

48'-4" Prestressed Box Girder (PBGS) Span
Pile Bent Abuts.
28'-0" Roadway, Skew 25° Rt.

† See Roadway Sheets for Grading Transition

✳ 4'-0" Berm Slope @ 10:1 (Typ.)

Boring

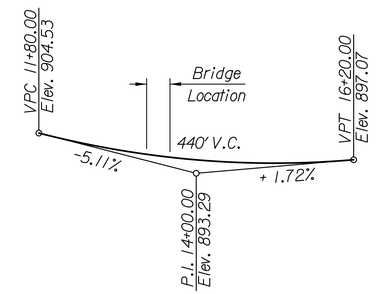

PROPOSED CEMETERY ROAD PROFILE

DAWSON CREEK HYDRAULIC DATA

Drainage Area	9.9 Sq. Mi.
Design Frequency	25 Yr.
Design Discharge (Q25)	3,980 cfs
Design High Water	899.80 Ft.
Design Backwater	-0.07 Ft.
Design Backwater Elevation	899.80 Ft.
Overtopping Elevation	896.24 Ft.
Overtopping Frequency	3 Yr.
Discharge at Q100	6,150 cfs
Backwater at Q100	-0.00 Ft.
Backwater elevation at Q100	900.91 Ft.
Historic Highwater Elevation	n/a
Ordinary Highwater Elevation	893.1 Ft. (Estimated)
Ordinary Highwater Discharge	800 cfs (Estimated)
Existing Waterway Area	270.6 Sq. Ft.
Total waterway provided	225.2 Sq. Ft.
Design waterway provided	225.2 Sq. Ft.
Average velocity at Qdes	3.8 fps
Average velocity at Q100	4.1 fps

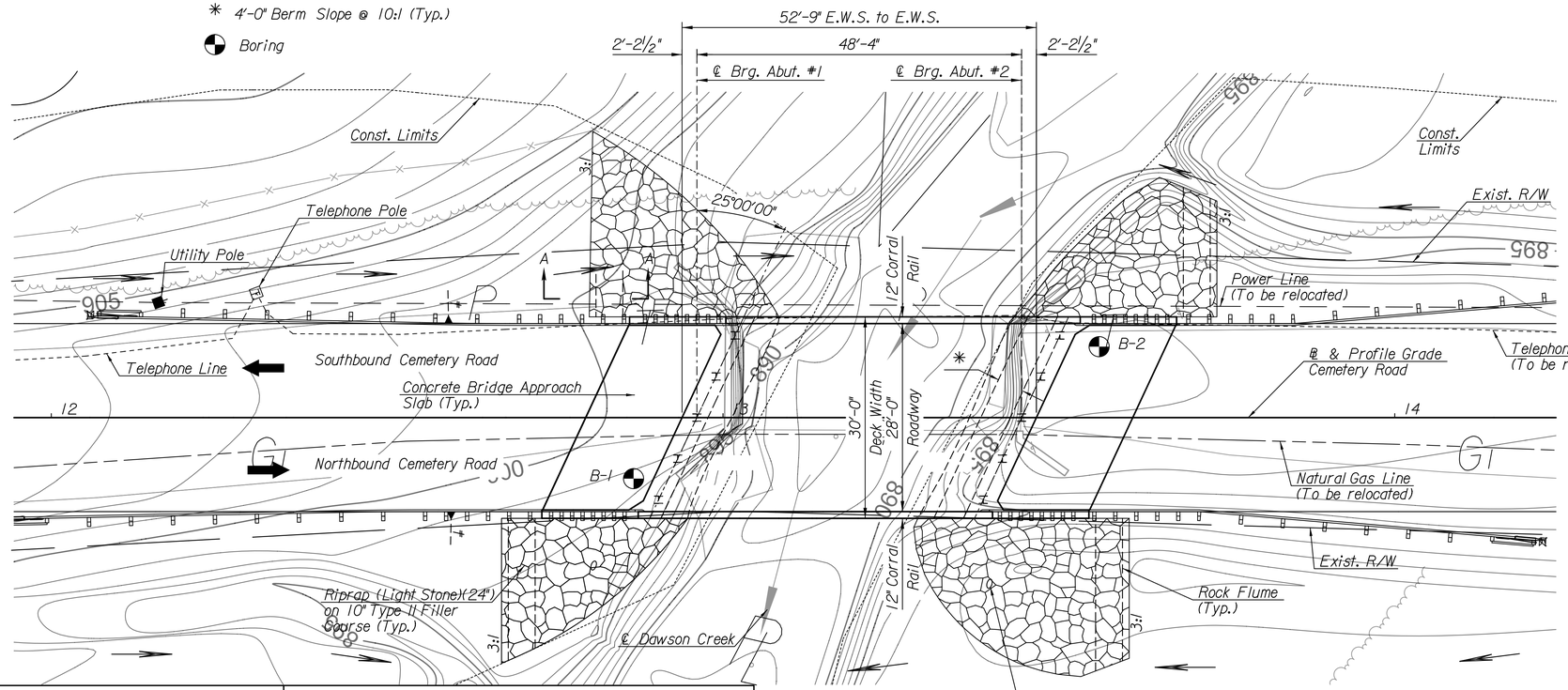

PLAN

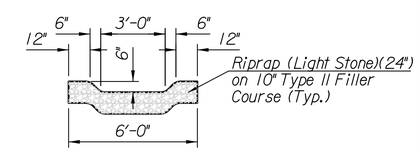

SECTION A-A

(Typical 4 corners)

Scale: 1" = 10'

BM #201 - Set railroad spike in power pole.
N=380,740.51 E=2,127,542.27 Elev=899.12

BM #1718 - Set railroad spike in North face power pole.
N=380,084.39 E=2,127,295.21 Elev=916.99

NO.	DATE	REVISIONS	BY	APP'D
3				
2				
1				

KANSAS DEPARTMENT OF TRANSPORTATION

Br. No. 000521057303904 Sta. 13+20.28

CONSTRUCTION LAYOUT
CEMETERY ROAD OVER DAWSON CREEK

Proj. No. 52 C-4611-01 Leavenworth Co.

SHEET NO. OF	SCALE	APP'D	
DESIGNED	DETAILED	QUANTITIES	CADD
DESIGN CK.	DETAIL CK.	QUAN. CK.	CADD CK.

Plotted By: bblizzard Plot Location:
File: G:\12902\Micro\Bridge\12902RB601_003_Conlay.dgn
Plot Date: 7/21/2015

STATE	PROJECT NO.	YEAR	SHEET NO.	TOTAL SHEETS
KANSAS	52 C-4611-01	2015	19	64

BRAUN INTERTEC

LOG OF BORING

Braun Project 20160536.001A
Geotechnical Evaluation
Leavenworth County Bridge Replacement E-20
Cemetery Road over Dawson Creek
Easton, Kansas

BORING: **B-1**
LOCATION: Latitude: North 39.3420
Longitude: West 95.1182

DRILLER: RC Drilling | METHOD: Power Auger | DATE: **5/26/15** | SCALE: **1" = 4'**

(See Descriptive Terminology sheet for explanation of abbreviations)

Elev. feet	Depth feet	Symbol	Description of Materials (Soil-ASTM D2488 or D2487, Rock-USACE EM1110-1-2908)	BPF	WL	MC %	Tests or Notes
898.9	0.0						
898.5	0.4	FILL	FILL: Gravel with Clay, yellow brown				
		FILL	FILL: Fat Clay, trace Gravel, brown, moist	18		20	
892.9	6.0						
		CL	LEAN CLAY, very dark brown and red, moist, firm to soft	10	▼ ▽	31	An open triangle in the water level (WL) column indicates the depth at which groundwater was observed while drilling. A solid triangle indicates the groundwater level in the boring on the date indicated. Groundwater levels fluctuate.
885.9	13.0						
		CH	FAT CLAY, gray and dark brown, wet, soft			35	
881.9	17.0						
		SH	Highly weathered SHALE, yellow brown, soft	53		23	
875.9	23.0						
		SH	Moderately weathered SHALE, gray with yellow brown, moderately hard	50/6"		17	
870.9	28.0						
		SH	SHALE, gray, moderately hard	50/2"		12	

LOG OF BORING N:\GINT\PROJECTS\KANSAS CITY\20160536.001A.GPJ BRAUN_V8_CURRENT.GDT 6/18/15 17:28

BRAUN INTERTEC

LOG OF BORING

Braun Project 20160536.001A
Geotechnical Evaluation
Leavenworth County Bridge Replacement E-20
Cemetery Road over Dawson Creek
Easton, Kansas

BORING: **B-1 (cont.)**
LOCATION: Latitude: North 39.3420
Longitude: West 95.1182

DRILLER: RC Drilling | METHOD: Power Auger | DATE: **5/26/15** | SCALE: **1" = 4'**

(See Descriptive Terminology sheet for explanation of abbreviations)

Elev. feet	Depth feet	Symbol	Description of Materials (Soil-ASTM D2488 or D2487, Rock-USACE EM1110-1-2908)	BPF	WL	MC %	Tests or Notes
866.9	32.0						
			SHALE, gray, moderately hard *(continued)*	50/1"		15	
863.9	35.0						
			END OF BORING.				
			Water observed at 11.5 feet while drilling.				
			Water observed at 8.3 feet immediately after withdrawal of auger.				
			Boring then backfilled.				

LOG OF BORING N:\GINT\PROJECTS\KANSAS CITY\20160536.001A.GPJ BRAUN_V8_CURRENT.GDT 6/18/15 17:29

Plotted By: bblizzard | Plot Location:
File: G:\12902\MicroBridge\12902RB601_004_Boring1.dgn
Plot Date: 7/21/2015

Note: For boring locations see "Construction Layout" sheet.

NO.	DATE	REVISIONS	BY	APP'D
3				
2				
1				

KANSAS DEPARTMENT OF TRANSPORTATION
Br. No. 000521057303904 Sta. 13+20.28

ENGINEERING GEOLOGY

Proj. No. 52 C-4611-01 Leavenworth Co.

SHEET NO. OF	SCALE	APP'D	
DESIGNED	DETAILED	QUANTITIES	CADD
DESIGN CK.	DETAIL CK.	QUAN. CK.	CADD CK.

STATE	PROJECT NO.	YEAR	SHEET NO.	TOTAL SHEETS
KANSAS	52 C-4611-01	2015	20	64

BRAUN INTERTEC

LOG OF BORING

Braun Project 20160536.001A
Geotechnical Evaluation
Leavenworth County Bridge Replacement E-20
Cemetery Road over Dawson Creek
Easton, Kansas

BORING: **B-2**
LOCATION: Latitude: North 39.34217
Longitude: West 95.11803

DRILLER: RC Drilling | METHOD: Power Auger | DATE: **5/26/15** | SCALE: **1" = 4'**

(See Descriptive Terminology sheet for explanation of abbreviations)

Elev. feet	Depth feet	Symbol	Description of Materials (Soil-ASTM D2488 or D2487, Rock-USACE EM1110-1-2908)	BPF	WL	MC %	Tests or Notes
898.2	0.0						
898.0	0.3	PAV	Asphalt				
		CL	LEAN CLAY, very dark brown and red, moist, firm to soft	14		19	
				5		33	
885.2	13.0						
		CH	FAT CLAY trace Sand, dark gray, saturated, soft	3		44	
880.7	17.5						
		SH	Highly weathered Sandy SHALE, yellow brown, soft	34		18	
875.2	23.0						
		SH	Moderately weathered SHALE with SANDSTONE lenses, gray with yellow brown, moderately hard	69		19	
870.2	28.0						
		SH	SHALE, light gray, moderately hard	50/4"		19	

LOG OF BORING N:\GINT\PROJECTS\KANSAS CITY\20160536.001A.GPJ BRAUN_V8_CURRENT.GDT 6/24/15 16:06

BRAUN INTERTEC

LOG OF BORING

Braun Project 20160536.001A
Geotechnical Evaluation
Leavenworth County Bridge Replacement E-20
Cemetery Road over Dawson Creek
Easton, Kansas

BORING: **B-2 (cont.)**
LOCATION: Latitude: North 39.34217
Longitude: West 95.11803

DRILLER: RC Drilling | METHOD: Power Auger | DATE: **5/26/15** | SCALE: **1" = 4'**

(See Descriptive Terminology sheet for explanation of abbreviations)

Elev. feet	Depth feet	Symbol	Description of Materials (Soil-ASTM D2488 or D2487, Rock-USACE EM1110-1-2908)	BPF	WL	MC %	Tests or Notes
866.2	32.0						
			SHALE, light gray, moderately hard *(continued)*	50/1"		20	
				50/1"		15	
858.2	40.0						
			END OF BORING.				
			Water observed at 8 feet while drilling.				
			Water observed at 7.3 feet immediately after withdrawal of auger.				
			Boring then backfilled.				

LOG OF BORING N:\GINT\PROJECTS\KANSAS CITY\20160536.001A.GPJ BRAUN_V8_CURRENT.GDT 6/24/15 16:06

Plotted By: bblizzard | Plot Location:
File: G:\V2902\Micro\Bridge\12902R8601_005_Boring2.dgn
Plot Date: 7/21/2015

Note: For boring locations see "Construction Layout" sheet.

NO.	DATE	REVISIONS	BY	APP'D
3				
2				
1				

KANSAS DEPARTMENT OF TRANSPORTATION
Br. No. 000521057303904 Sta. 13+20.28

ENGINEERING GEOLOGY

Proj. No. 52 C-4611-01 Leavenworth Co.

SHEET NO. OF	SCALE	APP'D	
DESIGNED	DETAILED	QUANTITIES	CADD
DESIGN CK.	DETAIL CK.	QUAN. CK.	CADD CK.

STATE	PROJECT NO.	YEAR	SHEET NO.	TOTAL SHEETS
KANSAS	52 C-4611-01	2015	21	64

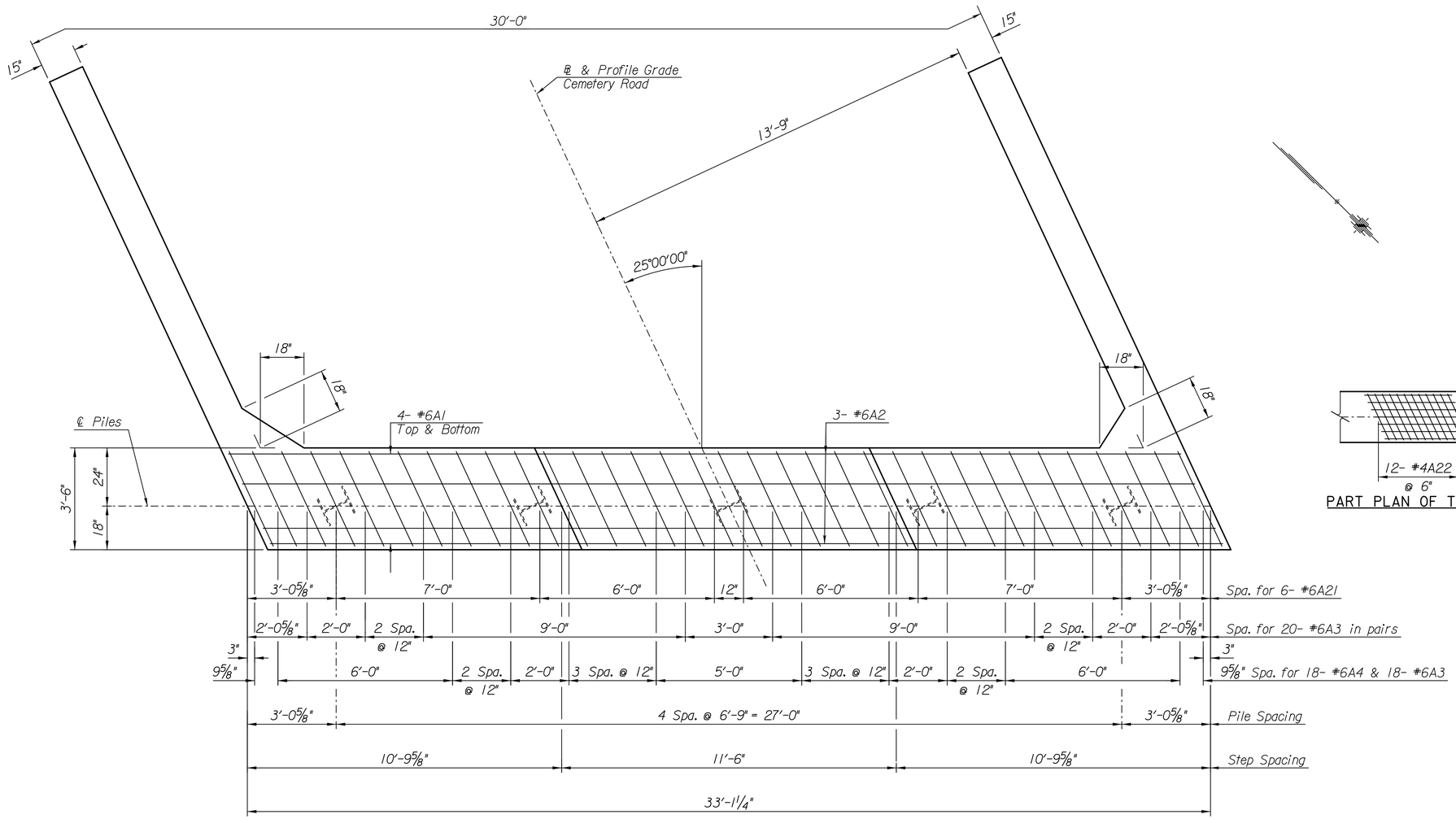

PLAN OF ABUTMENT BEAM

(Abutment No. 1 Shown, Abutment No. 2 Similar)

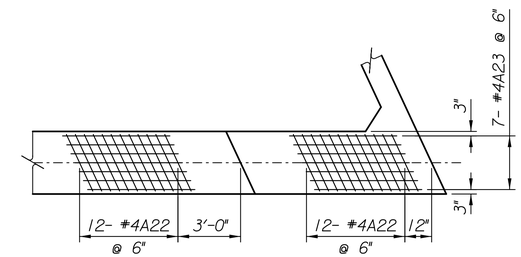

PART PLAN OF TYPICAL REINFORCEMENT UNDER BEAMS

Plotted By: bblizzard
Plot Location:
File: G:\12902\MicroBridge\12902R8601_006_Abutment 1-1.dgn
Plot Date: 7/21/2015

NO.	DATE	REVISIONS	BY	APP'D
3				
2				
1				

KANSAS DEPARTMENT OF TRANSPORTATION

Br. No. 0005210573039 04 Sta. 13+20.28

ABUTMENT DETAILS
CEMETERY ROAD OVER DAWSON CREEK

Proj. No. 52 C-4611-01 Leavenworth Co.

SHEET NO. OF	SCALE	APP'D	
DESIGNED	DETAILED	QUANTITIES	CADD
DESIGN CK.	DETAIL CK.	QUAN. CK.	CADD CK.

STATE	PROJECT NO.	YEAR	SHEET NO.	TOTAL SHEETS
KANSAS	52 C-4611-01	2015	22	64

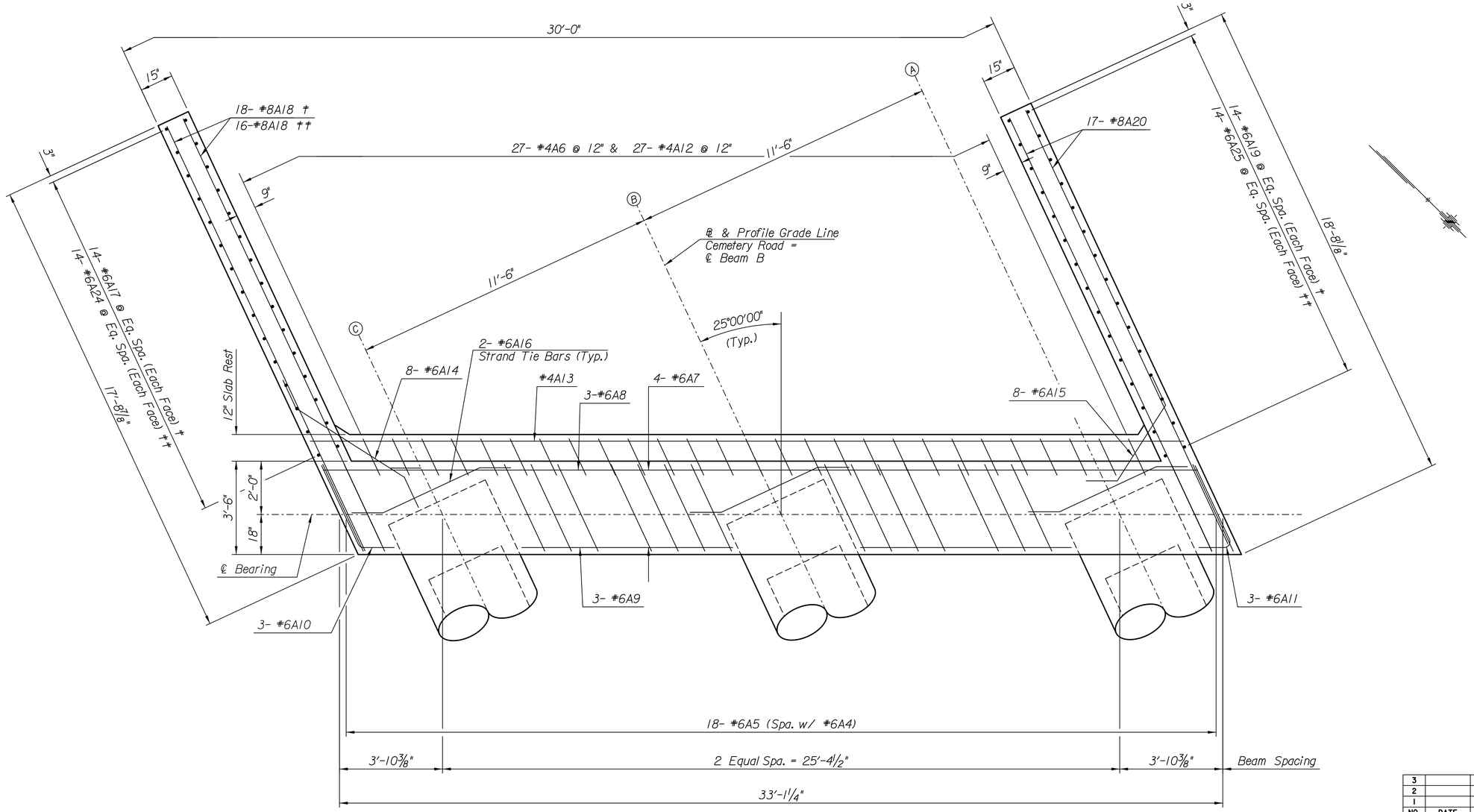

PLAN OF ABUTMENT

(Abutment No. 1 Shown, Abutment No. 2 Similar)

Note:
† Denotes Abut. No. 1
†† Denotes Abut. No. 2

NO.	DATE	REVISIONS	BY	APP'D
3				
2				
1				

KANSAS DEPARTMENT OF TRANSPORTATION

Br. No. 000521057303904 Sta. 13+20.28

ABUTMENT DETAILS
CEMETERY ROAD OVER DAWSON CREEK

Proj. No. 52 C-4611-01 Leavenworth Co.

SHEET NO. OF	SCALE	APP'D	
DESIGNED	DETAILED	QUANTITIES	CADD
DESIGN CK.	DETAIL CK.	QUAN. CK.	CADD CK.

Plotted By: bblizzard Plot Location:
File: G:\12902\Micro\Bridge\12902R8601_007_Abutment 1-2.dgn
Plot Date: 7/21/2015

STATE	PROJECT NO.	YEAR	SHEET NO.	TOTAL SHEETS
KANSAS	52 C-4611-01	2015	23	64

BEAM SEAT ELEVATIONS		
Beam	Abut. No. 1	Abut. No. 2
A	895.92	894.55
B	896.34	894.92
C	896.28	894.83

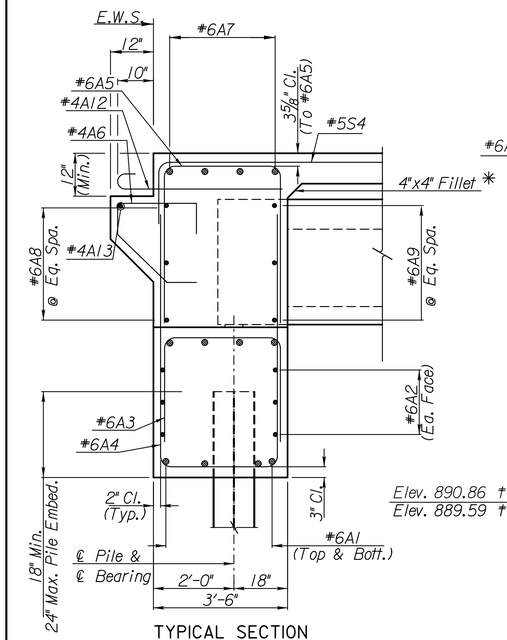

TYPICAL SECTION

* 4"x4" Fillet required if Precast Panels are not used.

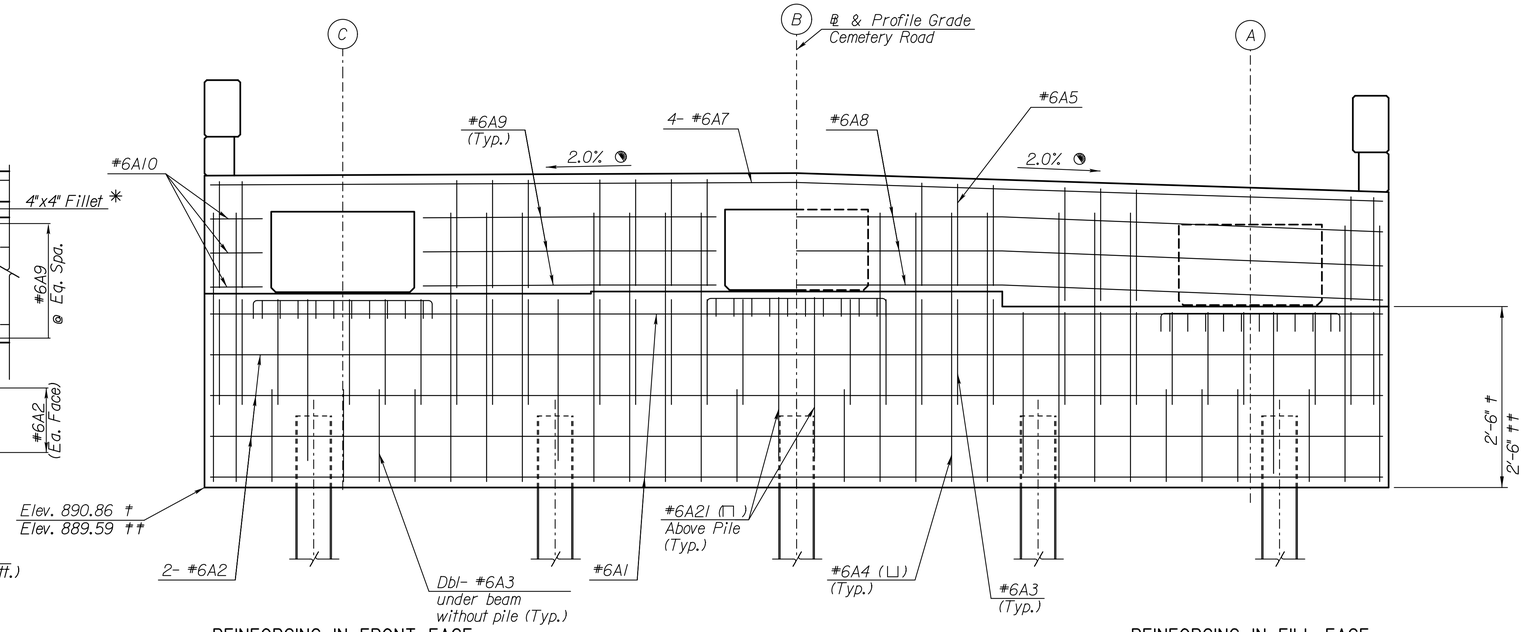

REINFORCING IN FRONT FACE

ABUTMENT ELEVATION

(Abutment No. 1 Shown, Abutment No. 2 Similar)

◔ Cross slope perpendicular to ℄ Cemetery Road

REINFORCING IN FILL FACE

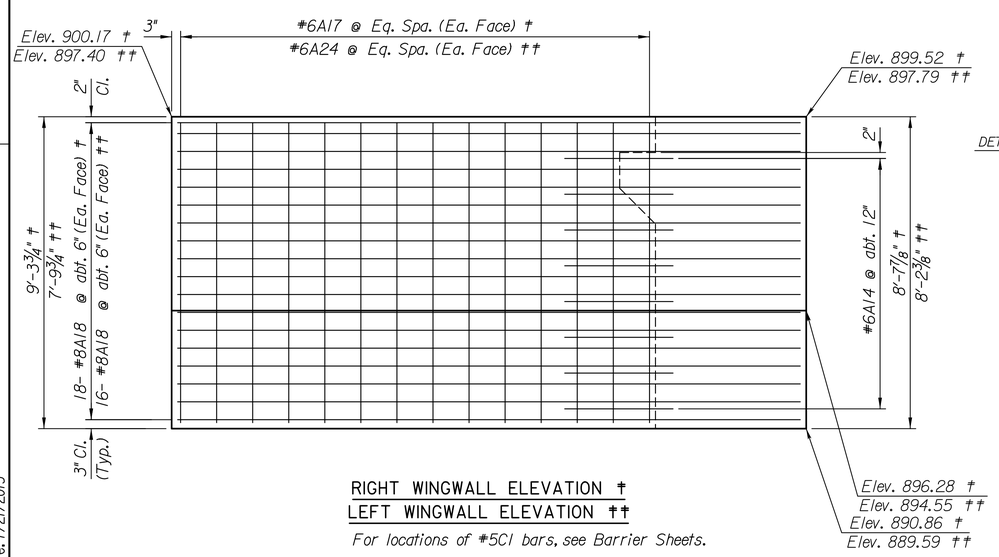

RIGHT WINGWALL ELEVATION †

LEFT WINGWALL ELEVATION ††

For locations of #5C1 bars, see Barrier Sheets.

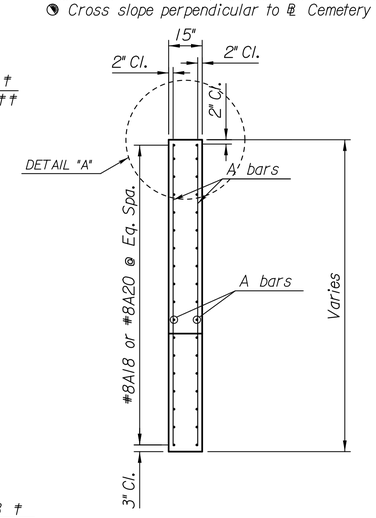

WINGWALL SECTION

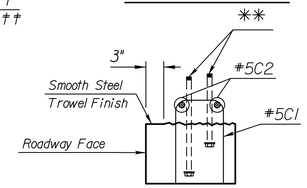

DETAIL "A"

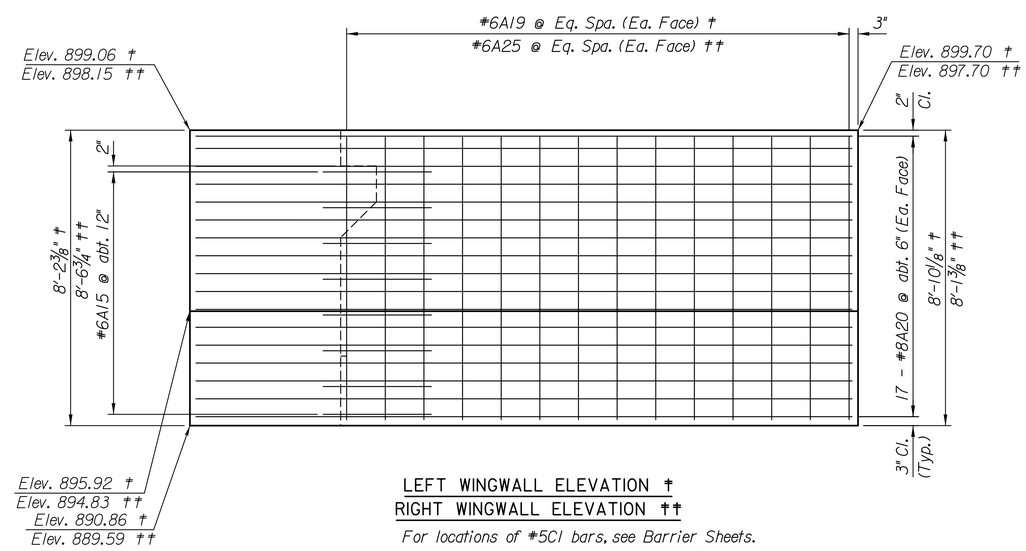

LEFT WINGWALL ELEVATION †

RIGHT WINGWALL ELEVATION ††

For locations of #5C1 bars, see Barrier Sheets.

Note:

† Denotes Abut. No. 1

†† Denotes Abut. No. 2

** See Thrie Beam Details sheet for anchor bolt location, size, and embedment

NO.	DATE	REVISIONS	BY	APP'D
3				
2				
1				

KANSAS DEPARTMENT OF TRANSPORTATION

Br. No. 000521057303904 Sta. 13+20.28

ABUTMENT DETAILS

CEMETERY ROAD OVER DAWSON CREEK

Proj. No. 52 C-4611-01 Leavenworth Co.

SHEET NO. OF	SCALE	APP'D	
DESIGNED	DETAILED	QUANTITIES	CADD
DESIGN CK.	DETAIL CK.	QUAN. CK.	CADD CK.

Plotted By: bblizzard

File: G:\2302\Micro\Bridge\2302RB601_008_Abutment 1-3.dgn

Plot Date: 7/21/2015

Plot Location:

STATE	PROJECT NO.	YEAR	SHEET NO.	TOTAL SHEETS
KANSAS	52 C-4611-01	2015	24	64

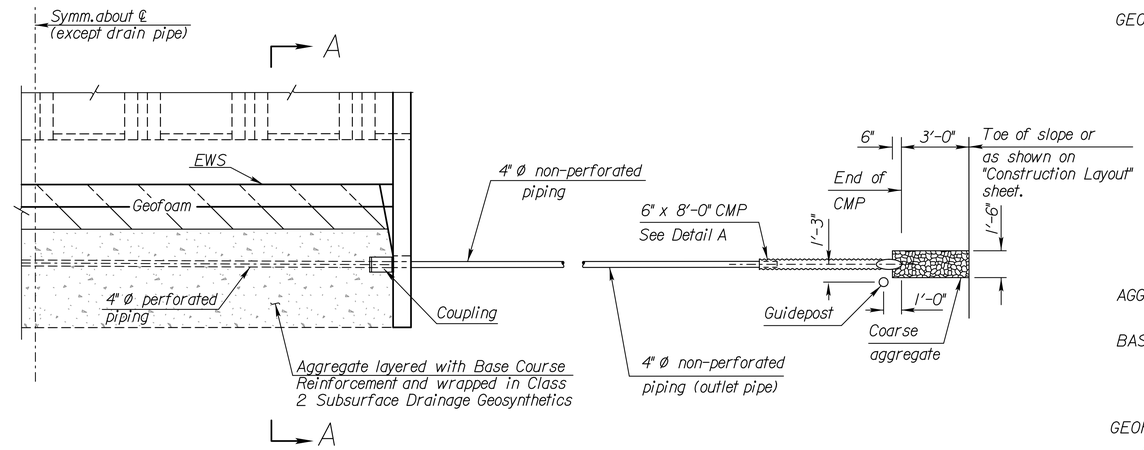

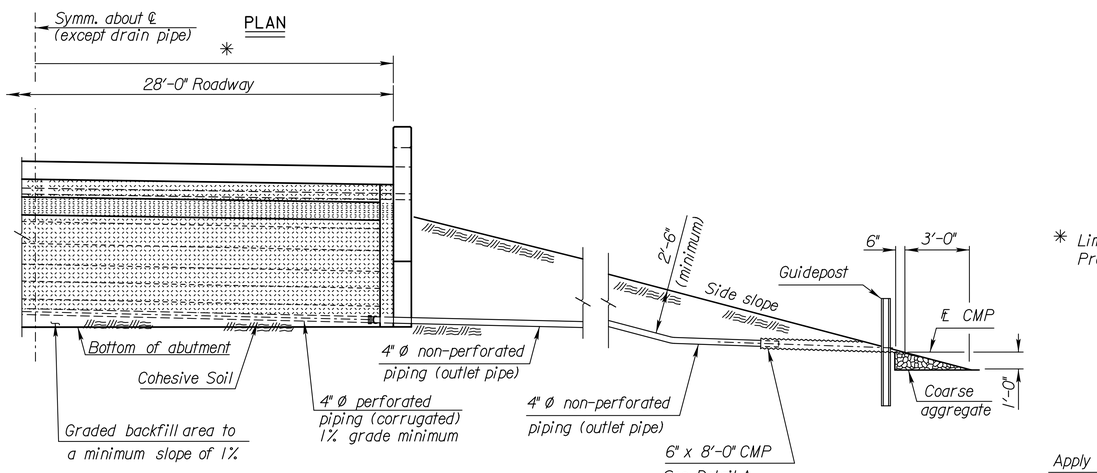

GENERAL NOTES

GEOSYNTHETICS: Use material that complies with KDOT Specification Section 1710 Class 2 subsurface drainage fabric. Place the Class 2 subsurface drainage fabric on graded and compacted material shaped as shown. Allow for enough material so that the top can be overlapped and the end folded to completely enclose the aggregate drain. Place the perforated drain pipe and couple to non-perforated pipe as shown. Allow the non-perforated pipe to pass through a hole carefully cut in fabric. Place aggregate within fabric to just leave the top of the pipe visible. Verify the slope of the pipe, that it is not damaged or displaced and that the couplers are firmly coupled. Continue to back fill to the elevation and shape shown. Lap the top of the fabric a minimum of 3'-0", fold and wrap the ends to enclose the drainage materials. Secure the folds and wraps by sewing or approved methods.

AGGREGATE: Use aggregates that complies with KDOT Specifications for SB-1 or SB-2.

BASE COURSE REINFORCEMENT: Use "Base Course Reinforcement" that complies with KDOT Specification Division 1700 or approved material. Place this material in uniform layers without gaps or sags per the manufacturer's recommendations.

GEOFOAM: Use "Geofoam" that complies with ASTM D6817 EPS 12. Acceptance according to Type "B" certification. Bond this material to the back wall protection using materials recommended by the manufacturer.

SOIL CAP: The soil will have a Unified Soil Classification of CL or ML according to ASTM D2487. Compact to Type A, MR-90.

PIPE: Place perforated pipe within the limits and use non-perforated pipe outside the limits of the Abutment Aggregate Drain.

ABUTMENT AGGREGATE DRAIN: The Bridge Contractor shall excavate to the limits shown on the Bridge Excavation Sheet. Backfill, compact & grade the cohesive soil to the limits shown. Place the bridge backwall protection, geofoam, geotextile, perforated pipe, alternating layers of aggregate and base course reinforcement as shown. Place the outlet pipe, the CMP, and the backfill. Guide post and coarse aggregate are subsidiary to this bid item. Guide post and coarse aggregate are not required if the CMP empties onto Slope Protection. Enclose the entire Abutment Aggregate Drain with the geotextile

BRIDGE BACKWALL PROTECTION SYSTEM: Apply a non coal-tar Bridge Backwall Protective System to the approach side of the abutments and the wings in accordance with KDOT Specifications and the manufacturer's recommendations. Cover the abutments and wings to the limits shown on the details. Repair any damage done at no charge to the state.

Compact the abutment backfill. See the KDOT Specifications.

Perforated pipe and non-perforated outlet pipe shall be corrugated polyethylene tubing conforming to the KDOT Specifications.

Fit the CMP end section with 1/4" galvanized mesh screen to prevent the entrance of rodents. Seal the joint between the outlet pipe and the end section with a joint sealer. Place Coarse aggregate at the outlet end as shown.

COHESIVE SOILS: Grade the bottom surface of the excavated area to drain as shown. Backfill this area with a cohesive type of soil. The soil will have a Unified Soil Classification of CL, CH, ML or MH according to ASTM D2487. Classification System with a minimum plasticity index of 13. Compact the material to Type A, MR-90 specifications. If the plasticity index cannot be met add and mix Bentonite, to the soil prior to placement and compaction so that the PI≥ 13.

✳ Limits of Bridge Backwall Protection System & Geofoam

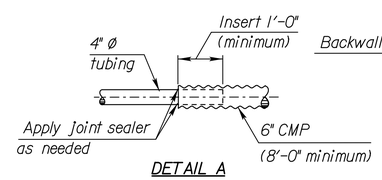

Note: The 1'-0" lap and joint sealer may be replaced by a reducing coupler at the junction of the CMP and the 4" round tubing.

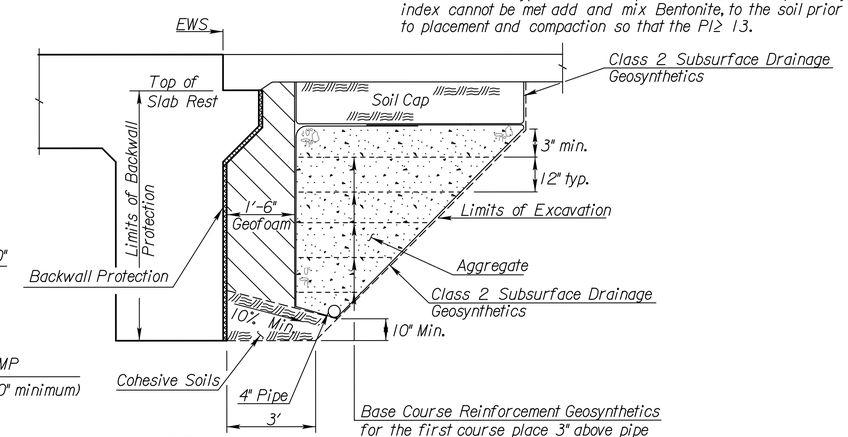

GUIDE POST

Notes:

Wood Guide Posts: Apply a preservative treatment conforming to the KDOT Specifications to the posts. Use only one type of preservative treatment on a project. Apply two coats of aluminum paint to the top 18" of the posts. Apply one coat of International Orange paint to the top 12" of the posts. State forces will apply reflectorized material.

Metal Guide Posts: Posts shall conform to the KDOT Specifications. Posts shall have a galvanized or baked enamel coating. Apply one coat of International Orange paint to the top 12" of the posts.

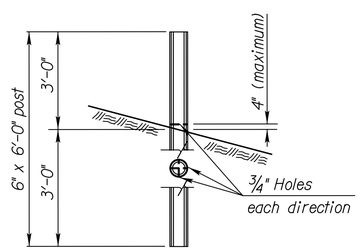

Wood Guide Post Option (6" Ø x 6'-0")

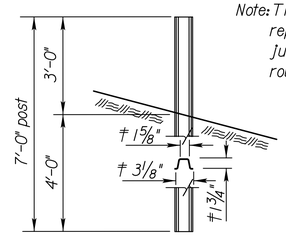

Metal Guide Post Option 7'-0" at 3.0 lbs/ft. flanged channel

‡ Nominal dimension.

SUMMARY OF QUANTITIES (2 Abutments)	
Abutment Aggregate Drain	68 Cu. Yds.
Bridge Backwall Protection System	110 Sq. Yds.
Items subsidiary to Abutment Aggregate Drain	
4" Ø Perforated Pipe	62 Lin. Ft.
4" Ø Outlet Pipe	36 Lin. Ft.
6" Ø CMP	16 Lin. Ft.
Guide Post	2 Each
Soil Cap	20 Cu. Yds.
Geosynthetics (Class 2 Subsurface Drainage)	404 Sq. Yds.
Geosynthetics (Base Course Reinforcement)	454 Sq. Yds.
Geofoam	18 Cu. Yds.

NO.	DATE	REVISIONS	BY	APP'D
7	11/18/14	Modified Per 2015 Specification	JPJ	CER
6	11/18/14	Removed SB-3	JPJ	CER
5	4/7/14	Current Release	JPJ	CER
4	2/12/14	Geofoam Type Change Added Benchmark	JPJ	CER
3	2/12/14	Geofoam Type Change	JPJ	CER
2	8/20/13	Geofoam Dimension Change	JPJ	TLF
1	7/23/12	Added Soil Cap to Summary	JPJ	TLF

KANSAS DEPARTMENT OF TRANSPORTATION

Br. No. 000521057303904 Sta. 13+20.28

ABUTMENT AGGREGATE DRAIN
CEMETERY ROAD OVER DAWSON CREEK

Proj. No. 52 C-4611-01 Leavenworth Co.

SHEET NO. OF	SCALE	APP'D	
DESIGNED	DETAILED	QUANTITIES	CADD
DESIGN CK.	DETAIL CK.	QUAN. CK.	CADD CK.

Plotted By: bblizzard | Plot Location:
File: G:\12302\Micro\Bridge\12302B8601_009_Aggdrain.dgn
Plot Date: 7/21/2015

STATE	PROJECT NO.	YEAR	SHEET NO.	TOTAL SHEETS
KANSAS	52 C-4611-01	2015	25	64

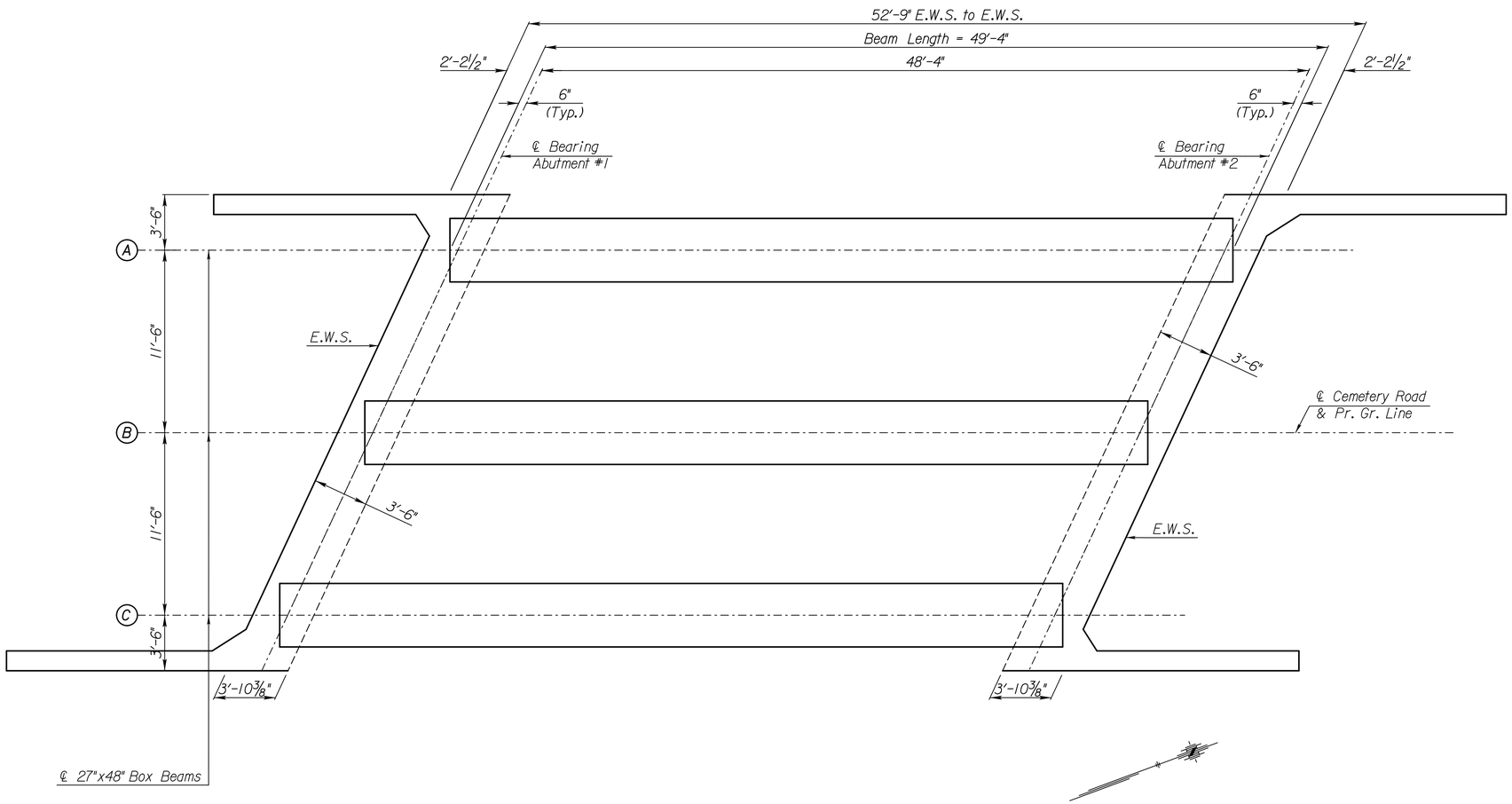

FRAMING PLAN

NO.	DATE	REVISIONS	BY	APP'D
3				
2				
1				

KANSAS DEPARTMENT OF TRANSPORTATION

Br. No. 000521057303904 Sta. 13+20.28

FRAMING PLAN
CEMETERY ROAD OVER DAWSON CREEK

Proj. No. 52 C-4611-01 Leavenworth Co.

SHEET NO. OF	SCALE	APP'D	
DESIGNED	DETAILED	QUANTITIES	CADD
DESIGN CK.	DETAIL CK.	QUAN. CK.	CADD CK.

Plotted By: bblizzard
Plot Location:
File: G:\V2902\Micro\Bridge\12902RB601_010_Framingplan.dgn
Plot Date: 7/21/2015

STATE	PROJECT NO.	YEAR	SHEET NO.	TOTAL SHEETS
KANSAS	52 C-4611-01	2015	26	64

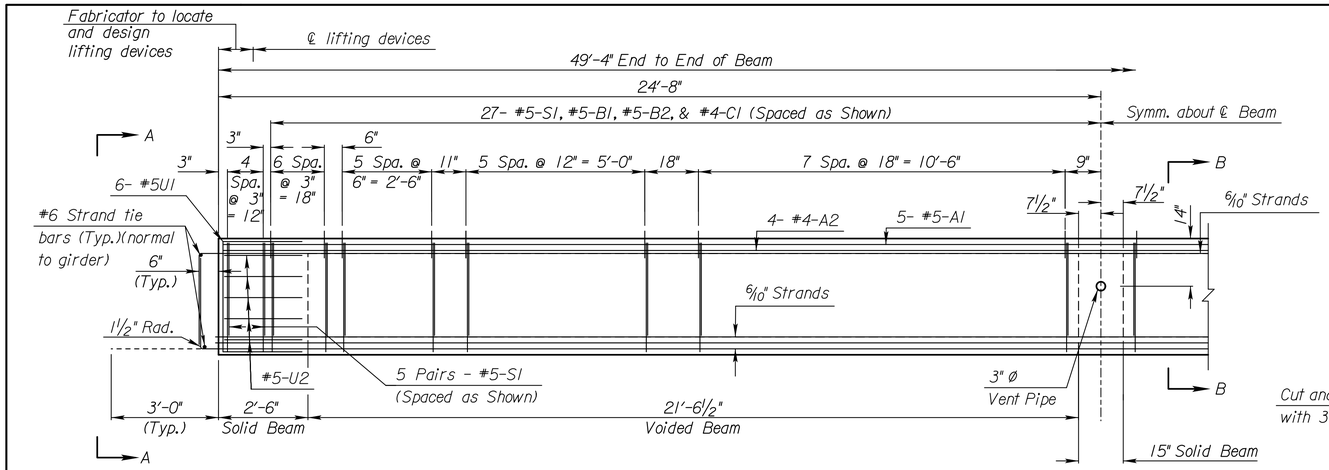

TYPICAL ELEVATION 27"X48" BOX BEAM

$f'c_i$ = 5,600 psi
$f'c$ = 6,500 psi

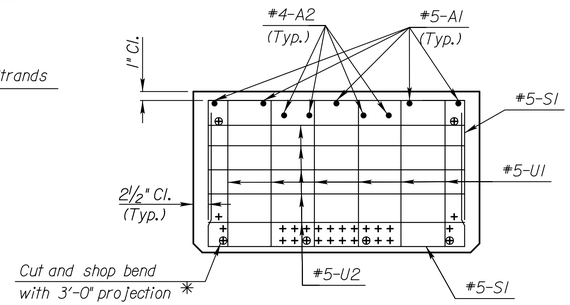

SECTION A-A

(+) Indicates prestressing strands
(⊕) Strands to be cut and shop bend with a 3'-0" projection *

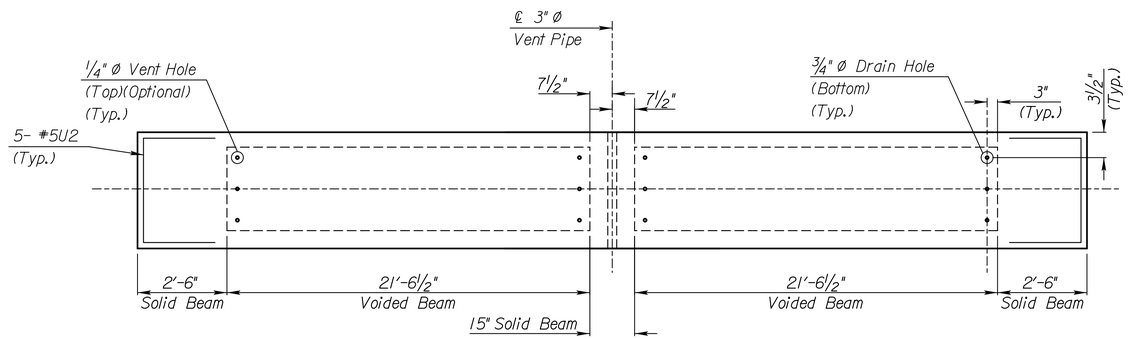

PLAN OF 27"X48" BOX BEAM

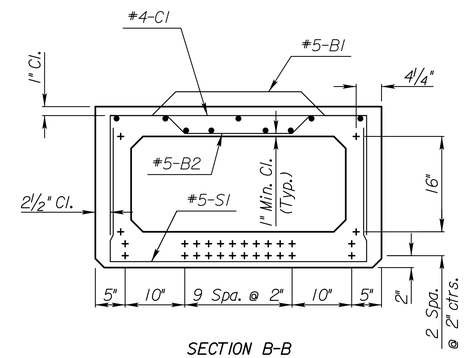

SECTION B-B

* At the contractor's option the location for the bent strands may be varied from that shown. The total number of bent strands shall not be changed and revised strand locations must be symmetrical. One strand tie bar is required for each layer of bent strands.

Notes:
During transportation and construction only, support beams on bearing points a maximum of 5 Ft. from the beam end. The Fabricator shall show the proposed support locations on the shop drawings.

Extend 6 strands 3'-0" beyond the end of the beam. All other strands shall be cut flush with the end of the beam.

Void filler shall be non-absorptive cellular polystyrene, according to ASTM C 578, designed to withstand the forces imposed upon them during fabrication without substantial deformation such as bulging, sagging, or collapsing. Cardboard void filler will not be allowed. The outside dimensions of void filler shall be as shown on the plans. When two or more sections of void filler are used to make up a required length, they shall be effectively taped or spliced together.

All dimensions are out to out.

Hooks and bends shall be in accordance with the CRSI Manual of Standard Practice for Detailing Reinforced Concrete Structures, Stirrup and Tie Dimensions.

Actual bar lengths are measured along centerline of bar to the nearest inch.

Minimum clearance to reinforcing shall be 1".

All bar reinforcement shall be Grade 60.

Welded Wire Reinforcement (WWR) shall be in accordance with AASHTO M 221.

Welded Wire Fabric Equivalent Steel A_s †						
Size	3"	6"	9"	12"	15"	18"
#3	0.440	0.220	0.147	0.110	0.088	0.073
#4	0.800	0.400	0.267	0.200	0.160	0.133
#5	1.234	0.617	0.411	0.308	0.247	0.206
#6	1.761	0.880	0.587	0.440	0.352	0.293

† If welded wire fabric (WWF) is used in-lieu of reinforcing steel bars shown on this sheet, the spacing of wires for the WWF shall be equal or less than the vertical bars shown in the typical beam section above. The equivalent A for the WWF shall be equal to or greater than typical beam section above.

BILL OF REINFORCING STEEL
27"x48" Box Beam (1 Listed-3 Reqd.)

Straight bars				Bent bars			
Mark	No.	Size	Length	Mark	No.	Size	Length
A1	5	#5	49'-1"	B1	54	#5	4'-9"
				B2	54	#5	7'-8"
A2	4	#4	49'-1"	S1	74	#5	7'-5"
C1	54	#4	3'-7"	U1	12	#5	6'-4"
				U2	10	#5	7'-10"

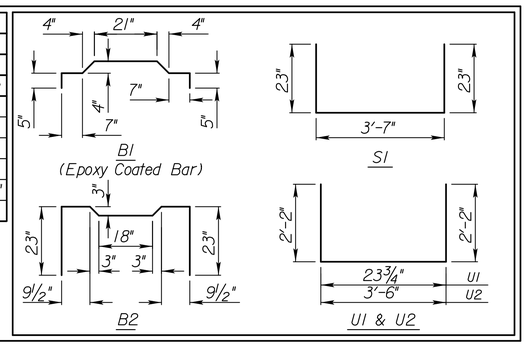

BILL OF MATERIAL

Item	Unit	Quantity
Prestressed Box Beam (27"x48") (3 @ 49.33')	Lin.Ft.	148
The following quantities are given for information only and shall not be paid for directly but shall be made subsidiary to the bid item "Prestressed Box Beam". Quantities are per beam (3 required)		
Beam concrete (f'c= 6,500 PSI)	Cu.Yds.	10.1
Approx. Wt.	Tons	20.5
6/10" Prestressing strand (270 KSI low relaxation fy= 243 KSI)	Lin.Ft.	1,418
Epoxy reinforcing steel (fy=60,000 PSI)	Lbs.	270
Reinforcing steel (fy=60,000 PSI)	Lbs.	1,760
Plain elastomeric bearing pads (¾" x 8" x 3'-9")	Each	2
Lifting devices	Each	8
Bearing plates (✡ x 1'-6" x 3'-10")	Each	2
3" Ø Vent Pipe	Lin.Ft.	4

✡ Use ¾" ℙ when field welding will occur, otherwise use ½" ℙ.

NO.	DATE	REVISIONS	BY	APP'D
3				
2				
1				

KANSAS DEPARTMENT OF TRANSPORTATION
Br. No. 0005210573039 04 Sta. 13+20.28

PRESTRESSED BOX BEAM DETAILS
CEMETERY ROAD OVER DAWSON CREEK
Proj. No. 52 C-4611-01 Leavenworth Co.

SHEET NO. OF	SCALE	APP'D	
DESIGNED	DETAILED	QUANTITIES	CADD
DESIGN CK.	DETAIL CK.	QUAN. CK.	CADD CK.

Plotted By: bblizzard Plot Location:
File: G:\V2902\Micro\Bridge\V2902R860I_011_Girder Elev.dgn
Plot Date: 7/21/2015

STATE	PROJECT NO.	YEAR	SHEET NO.	TOTAL SHEETS
KANSAS	52 C-4611-01	2015	27	64

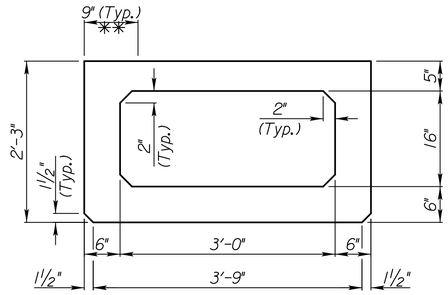

27"x48" Box Beam

Area	728.0 In.^{2}
IcG	66,623 In.^{4}
Y Bot	13.11 In.
Vol./Surf. Area	4.85 In.
Wt./Ft.	758 Lbs.

TYPICAL BEAM SECTIONS

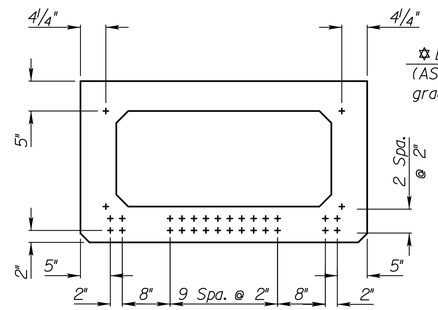

STRAND ARRANGEMENTS

Showing All Possible Strand Locations

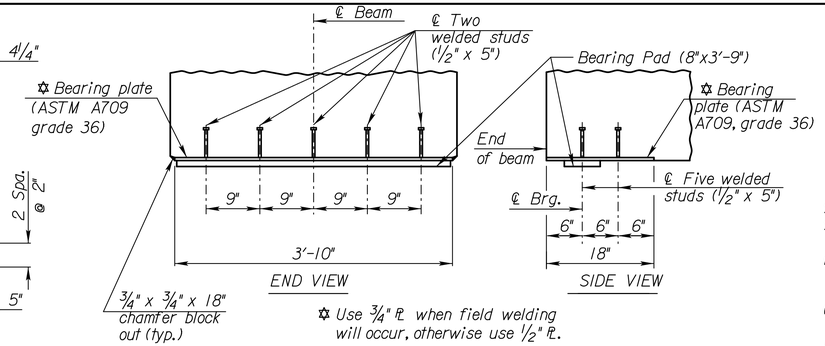

✡ Use ¾" ℙ when field welding will occur, otherwise use ½" ℙ.

BEARING PLATE DETAILS

Note: Stud welding shall be in accordance with the latest edition of AWS D1.1.

Use plate conforming to the requirements of ASTM A709 Grade 36. The stud anchors shall be made of material as specified for Shear Connector Studs in the Conrtact Specifications.

The exposed surface of the bearing plates shall be galvanized.

Note: Tolerance for camber is 1" maximum variation in camber between adjacent beams; and ⅛" per 10'-0" of span deviation from the specified camber but not greater than ½" deviation.

** Beam top flange shall be steel troweled to a smooth finish 9" at the edges, as shown. Apply 2 layers of 30-lb. roofing felt as a bond breaker to this region only excluding where joint filler is applied. The center portion shall be rough finished by scarifying the surface transversely with a wire brush, and no laitance shall remain on the surface.

For cast-in-place option (no panels), the outer 6" of flange shall be smooth and have 2 layers of 30-lb. roofing felt.

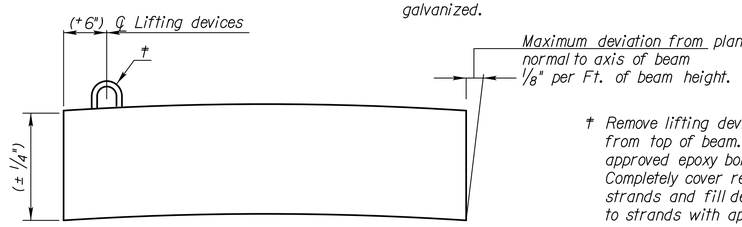

† Remove lifting device within ½" from top of beam. Coat area with approved epoxy bonding agent. Completely cover remaining exposed strands and fill depressions adjacent to strands with approved epoxy grout.

ELEVATION

Tolerance for sweep is ⅛" per 10'-0" of span but not greater than 1".

*Prior to shipping, the camber shall be no greater than the design camber + ½". The design camber is equal to the 50 day camber shown in the plans.

Note: Dimensions shown in parentheses are tolerances only.

CG= Center of Gravity

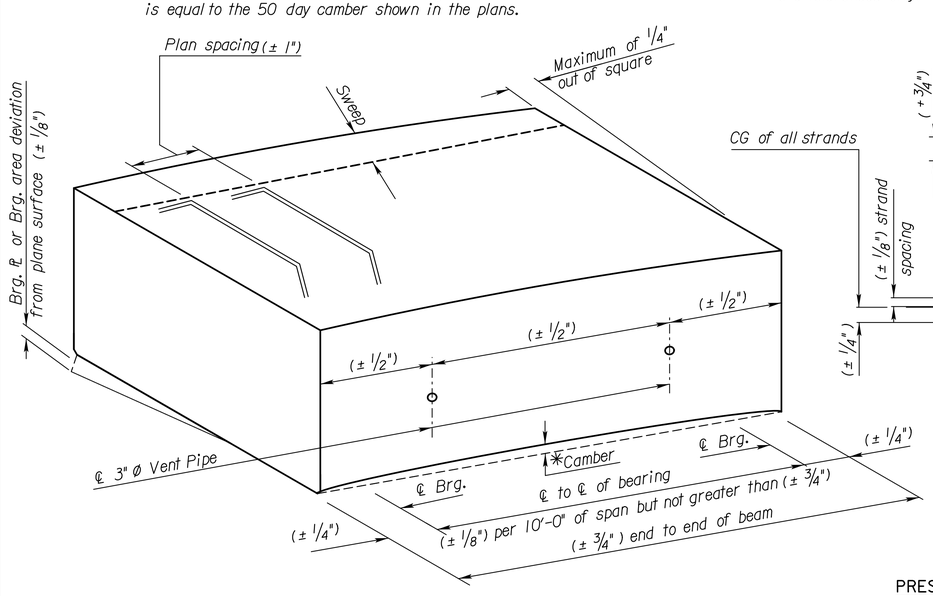

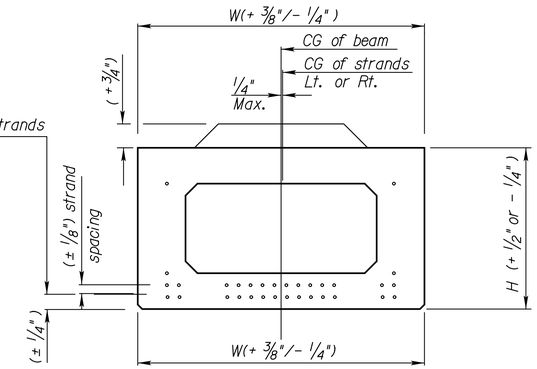

TYPICAL SECTION

PRESTRESSED BOX BEAM FABRICATION TOLERANCES

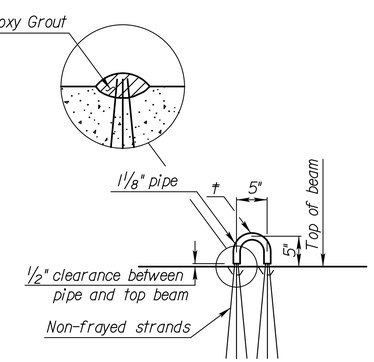

LIFTING DEVICE

Fabricator To Locate And Design Lifting Device. See Notes.

GENERAL NOTES

Fabricate the precast prestressed beams in accordance with the Contract Specifications. Submit shop drawings in accordance with the Contract Specifications.

Use air entrained concrete. The Engineer shall approve the mix design. Unless otherwise shown on the plans, f'c = 6500 psi and f'c$_i$ = 5600 psi.

Use reinforcing steel conforming to the requirements of ASTM A615, Grade 60. The reinforcing steel shown shall be uncoated unless otherwise indicated.

Use 6/10" nominal diameter (unless otherwise indicated), uncoated, seven-wire, low relaxation prestressing tendons conforming to the requirements of ASTM A416, Grade 270.

Use bolts having an ultimate strength 50% in excess of the manufacturer's safe load. All items (except the tendons) cast-in or inserted in prestressed beams shall be epoxy coated or galvanized. Show Formed Holes on shop drawings.

Show on the shop drawings any hardware, holes or other appurtenances that are required to be incorporated into the girder to construct the girder or for any temporary works needed to construct the bridge (e.g. safety railing pockets).

After beams are in the final position, remove lifting devices. See "Lifting Device" detail below.

Use elastomeric bearing pads conforming to the Contract Specifications.

The beam lengths shown on the design plans are net lengths measured horizontally along the beam centerline. The beam manufacturer shall make necessary allowances for grade, and for shortening due to elastic shortening, creep and shrinkage.

The beams shall reasonably conform to the lines and dimensions shown on the design plans and be within the tolerances specified in the latest publication of AASHTO, "Tentative Standards for Prestressed Piles, Slab, I-Beams and Box Bridges and an Interim Manual for Inspection of Such Construction", except as modified by this sheet or the Contract Specifications.

Bevel all exposed edges of beams except the tops and ends with a ¾" triangular molding or round the edges to a ¾" radius.

Apply an initial force of 1,000 to 3,000 pounds to each strand to take up any slack in the cables. Unless otherwise noted on the plans, apply a force of 43,950 pounds to each strand. Stress harped strands to a magnitude such that they are tensioned to 43,950 pounds after they are in position.

Strike off level and apply a wire brush or stiff broom finish to the tops of the beams. Apply the finish transverse to the length of the beam. (Note: When using precast panels for deck construction, the outside 9" on each side of the top flange shall be finished smooth with a steel trowel. See previous sheet for details.) At approximately the time of initial set, brush the top of the beam transversely with a coarse wire brush to remove all laitance.

Fill trapped air holes and surface voids on the exterior face of the exterior beams with an approved concrete masonry coating. This work shall conform to Contract Specifications.

Detension strands in a sequence which minimizes lateral eccentricity. Show the method and sequence of strand release on the shop drawings. Use extreme care when lifting, handling, storing and transporting beams. Show the lifting device design and details on the shop drawings. Calculations for the lifting device shall be submitted to the Engineer for approval. Keep the beam in an upright position at all times. Support the beam on bearing points positioned directly below the designated lifting points or designated bearing points.

Do not place the bridge slab before the beams are 28 days old. Pour diaphragms as detailed in the bridge plans.

Stencil with paint the following information on the webs approximately 5'-0" from one end of the beam: date of concrete placement, date of strand release, and beam mark.

NO.	DATE	REVISIONS	BY	APP'D
3				
2				
1				

KANSAS DEPARTMENT OF TRANSPORTATION

Br. No. 00052105730390 4 Sta. 13+20.28

PRESTRESSED BOX BEAM DETAILS
CEMETERY ROAD OVER DAWSON CREEK

Proj. No. 52 C-4611-01 Leavenworth Co.

SHEET NO.	OF	SCALE	APP'D	
DESIGNED	DWT	DETAILED	DWM	QUANTITIES	CADD
DESIGN CK.	JDK	DETAIL CK.	DWT	QUAN. CK.	CADD CK.

Plotted By: bblizzard | Plot Location:
File: G:\12902\MicroBridge\12902R8601_012_Girder Detail.dgn
Plot Date: 7/21/2015

STATE	PROJECT NO.	YEAR	SHEET NO.	TOTAL SHEETS
KANSAS	52 C-4611-01	2015	28	64

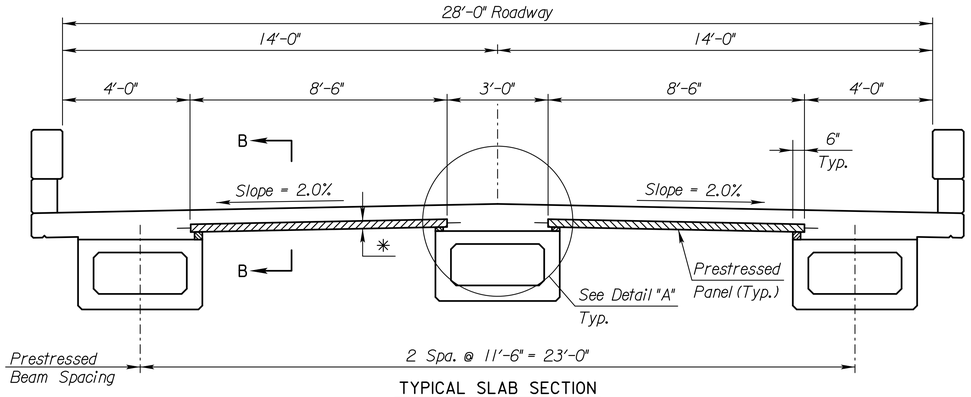

TYPICAL SLAB SECTION

TOLERANCES FOR PANELS	
Thickness	+ 1/4" - 1/8"
Length	± 1/4"
Width	± 1/4"
Square Ends (deviation from square)	± 1/4" + 1/8"
Mating Edge	
Position of Strands: +0 - 1/8" Vertical ± 1/2 Horizontal	

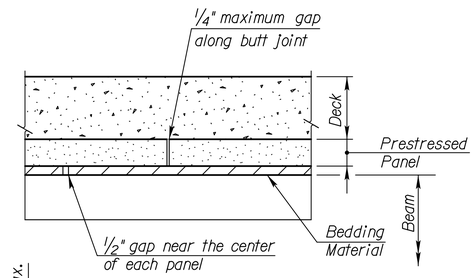

SECTION B-B

GENERAL NOTES FOR PANELS

Use Concrete Grade 5 (AE)(PB). (f'c = 5000 psi; f'c at release = 4000 psi).

Use reinforcing steel conforming to the requirements of ASTM A615, Grade 60. All reinforcing steel shall be epoxy coated.

Use 3/8" nominal diameter, uncoated, seven-wire, low relaxation prestressing tendons conforming to the requirements of ASTM A416, Grade 270.

Initial prestressing force = 16.1 kips per strand.

Submit shop details showing the length of the panels and the method of releasing the strands. Release strands symmetrically beginning with the center strand. Lift panels using four corner PA2 bars or by using alternate lifting devices approved by the Engineer.

Store the panels on a flat surface to prevent warping.

Bedding material for the precast units shall meet the following requirements for expanded or extruded polystyrene:

PROPERTY	TEST REQUIREMENTS
Compression Strength 60 psi Min.	ASTM D 1621
Water Absorption 2% by Vol. Max.	ASTM D 2842
Oxygen Index 24 Min.	ASTM D 2863

Glue all panel bedding material to the girder. The glue used shall be the type recommended by the panel bedding material manufacturer. Provide a 3/8" gap in the bedding strips for venting purposes. Locate the gaps near the center of each panel.

Deposit concrete in continuous strips over the girders and allow to flow under the ends of the composite deck panels. Consolidate concrete by additional insertion of vibrators directly over girder line. Concrete should then be placed on the remainder of the panels.

Handle the panels so that the PA2 bars are not damaged. Repair any damage to the PA2 bar epoxy coating in accordance with the KDOT Specifications.

Precast panels shall extend 1 1/2" into Concrete Diaphragms at Abutments.

* Use 3" when panel width "w" ≤ 8'-3".
Use 3 1/2" when panel width 8'-3" < "w" ≤ 8'-9".
Special Design for "W" > 8'-9".

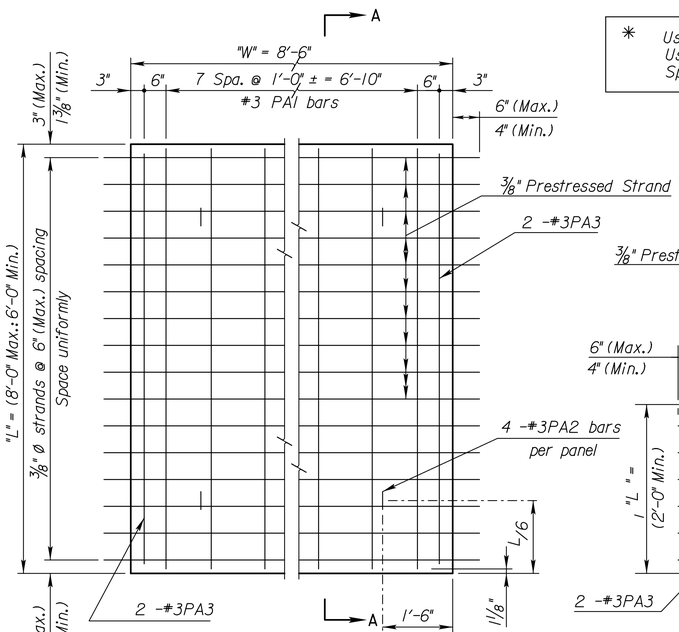

PRESTRESSED PANEL PLAN

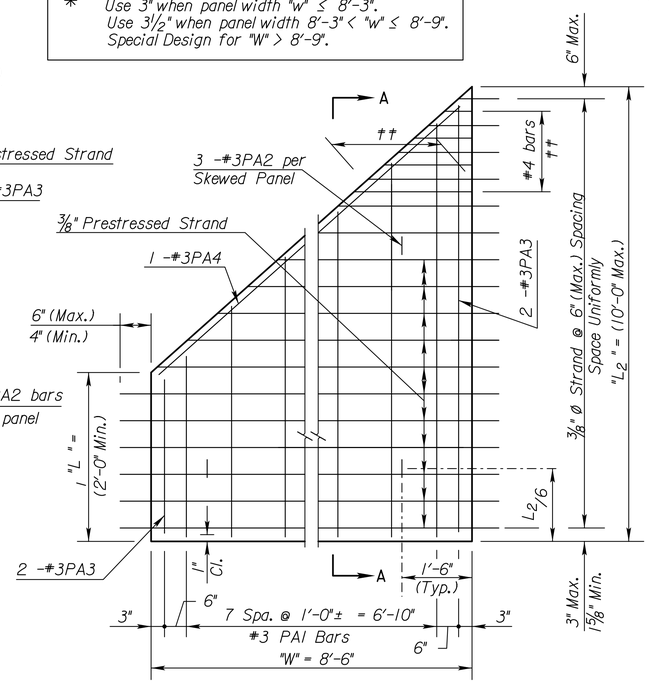

SKEWED PRESTRESSED PANEL PLAN

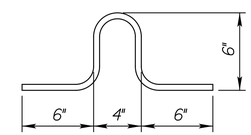

#3PA2 BAR BENDING

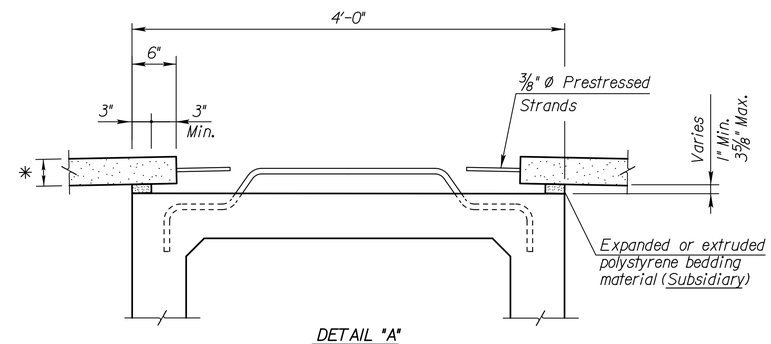

DETAIL "A"

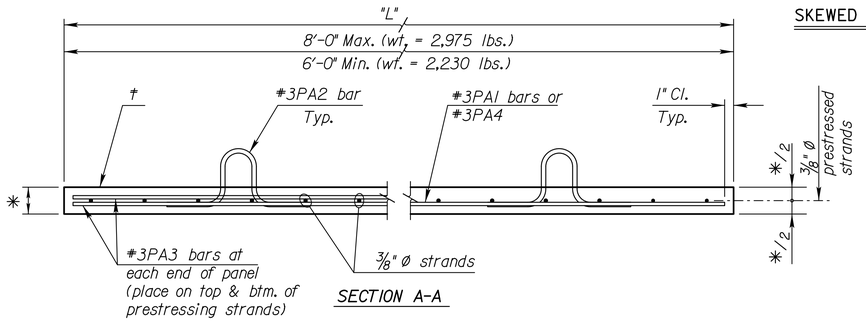

SECTION A-A

† When initial set occurs, rake the surface perpendicular to the strands making depressions of approximately 1/4". Use care with the rake to prevent pulling out the coarse aggregate. The Contractor shall make every effort to insure that this surface remains free of foreign material until the deck concrete is placed.

†† Any strand embedded 2'-0" or shorter shall have a #4 epoxy-coated reinforcing bar placed on each side of it, centered between the strands. The reinforcing bars do not need to extend beyond the limits of the panel. Strands 2'-0" or shorter may then be debonded at the fabricator's option.

BILL OF MATERIALS (Panels)	
Concrete	8.4 Cu. Yds.
Reinforcing Steel	480 Lbs.
3/8" Ø Prestressed Strands	1,665 Lin. Ft.

Quantities shown for information only. These quantities shall not be paid for directly but shall be included in the unit price bid for "Prestressed Concrete Panels".

NO.	DATE	REVISIONS	BY	APP'D
3				
2				
1				

KANSAS DEPARTMENT OF TRANSPORTATION

Br. No. 000521057303904 Sta. 13+20.28

PRESTRESSED CONCRETE PANEL DETAILS
CEMETERY ROAD OVER DAWSON CREEK

Proj. No. 52 C-4611-01 Leavenworth Co.

SHEET NO. OF	SCALE	APP'D	
DESIGNED	DETAILED	QUANTITIES	CADD
DESIGN CK.	DETAIL CK.	QUAN. CK.	CADD CK.

Plotted By: bblizzard | Plot Location:
File: G:\2902\Micro\Bridge\2902R8601_01_3_Precast Panels.dgn
Plot Date: 7/21/2015

STATE	PROJECT NO.	YEAR	SHEET NO.	TOTAL SHEETS
KANSAS	52 C-4611-01	2015	29	64

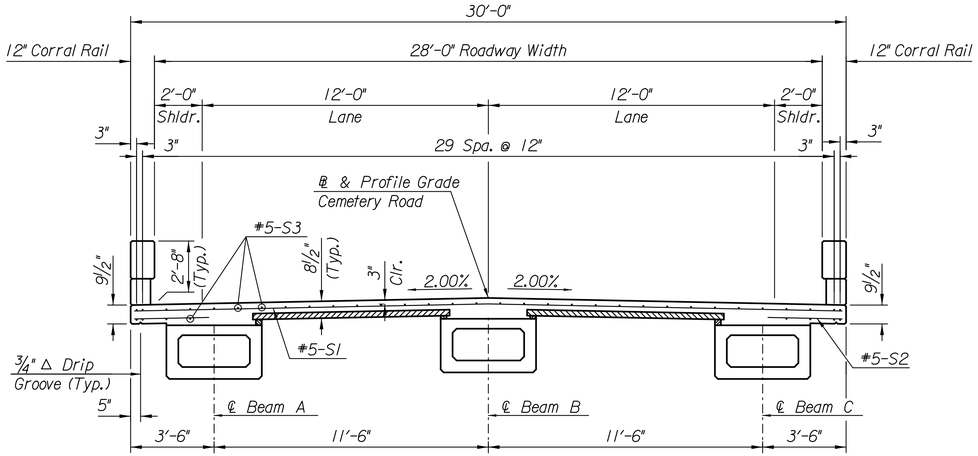

TYPICAL SLAB SECTION

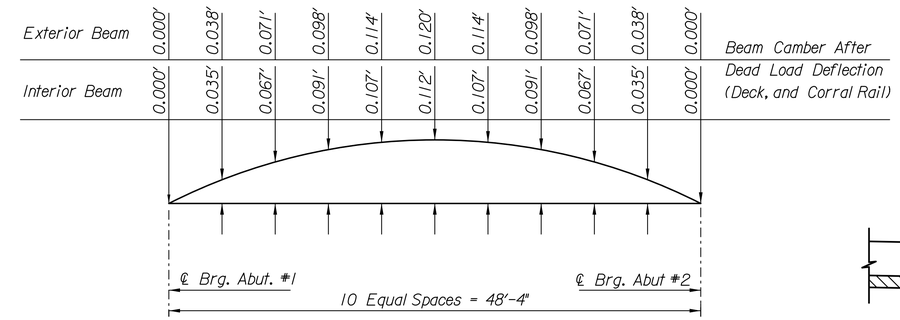

BEAM CAMBER AFTER DEAD LOAD DEFLECTION AND ORDINATES

Beam Camber @ Release: 0.089' @ Midspan

Beam Camber @ 50 days: 0.158' @ Midspan

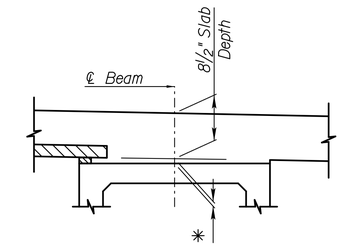

CONCRETE HAUNCH DETAIL

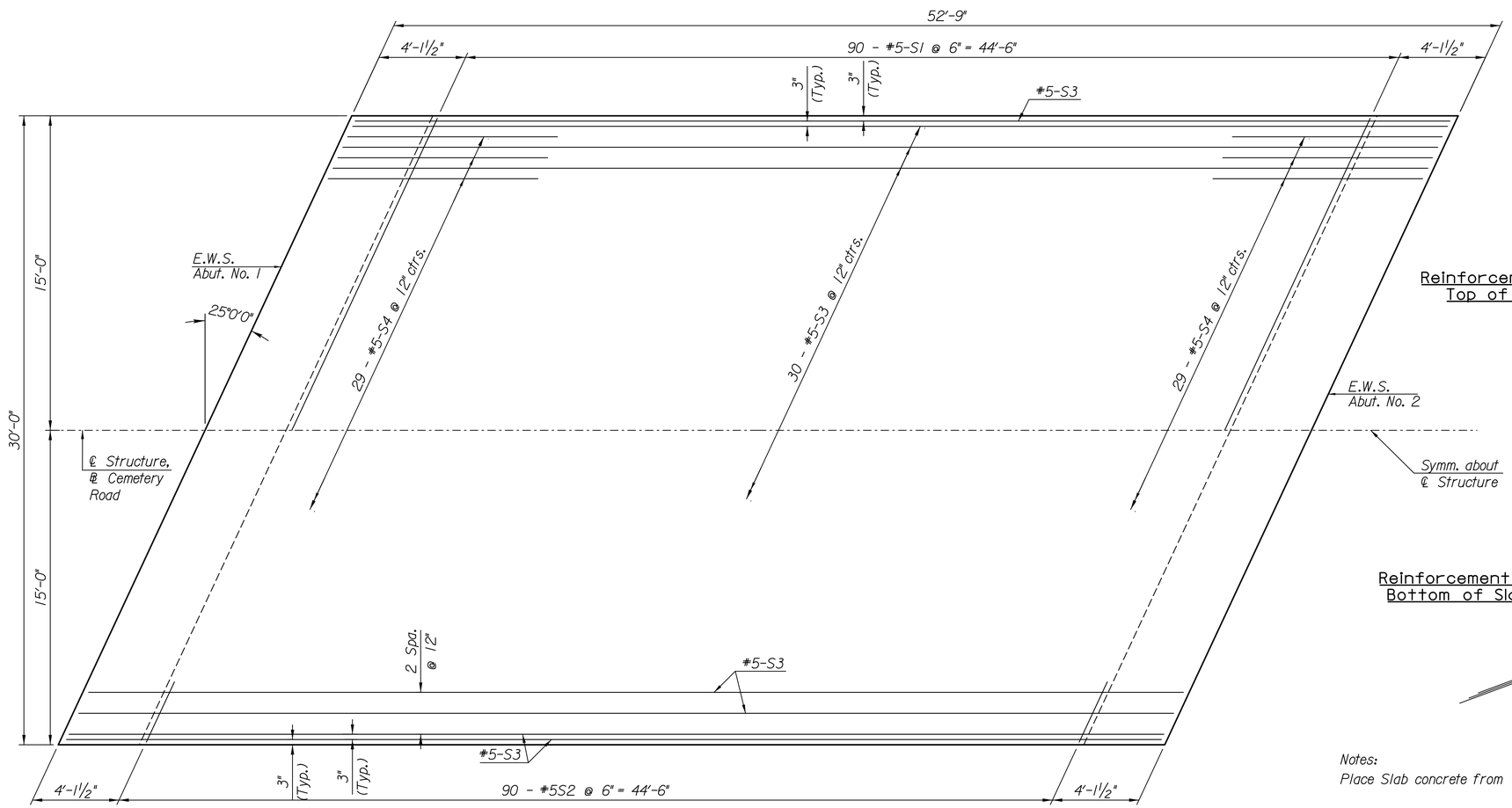

Reinforcement in Top of Slab

Reinforcement in Bottom of Slab

DECK REINFORCING PLAN

CAMBER: Construct the finished deck to plan grade by varying the thickness of the polystyrene bedding material between the top of the beams and the bottom of the panels, and if necessary, by varying the thickness of the deck above the panels to provide for prestress camber, concrete dead load deflection, and vertical curvature. After the prestressed beams are erected, measure the camber in the field by taking a profile of each beam. Correct any variation between the actual camber and concrete dead load deflection shown in the plans by varying the thickness of the polystyrene bedding material between the top of the beam and the bottom of the panel, and if necessary, by varying the deck thickness so that the finished floor is constructed to the theoretical grade. The polystyrene bedding material thickness shall be a maximum of 4 inches and a minimum of 1 inch. The minimum thickness of the slab over the beam shall be 5.5 inches above the top of the panels.

The theoretical amount of concrete required for the fillets is 3.9 C.Y. This amount of concrete is included in the Summary of Quantities. Any additional concrete required to construct the fillets will be subsidiary. Prior to shipping, the camber shall be no greater than the design camber + ½". The design camber is equal to the 50 day camber shown in the plans.

* BEAM HAUNCH DEPTHS			
	Abut. #1	Mid-Span	Abut. #2
Beam A	0.296'	0.131'	0.298'
Beam B	0.284'	0.128'	0.287'
Beam C	0.297'	0.128'	0.290'

Notes:
Place Slab concrete from end to end, working uphill.

Abutments are parallel.

NO.	DATE	REVISIONS	BY	APP'D
3				
2				
1				

KANSAS DEPARTMENT OF TRANSPORTATION

Br. No. 000521057303904 Sta. 13+20.28

SLAB PLAN & SECTION
CEMETERY ROAD OVER DAWSON CREEK

Proj. No. 52 C-4611-01 Leavenworth Co.

SHEET NO. OF	SCALE	APP'D	
DESIGNED	DETAILED	QUANTITIES	CADD
DESIGN CK.	DETAIL CK.	QUAN. CK.	CADD CK.

Plotted By: bblizzard | Plot Location:
File: G:\12902\Micro\Bridge\12902B860I_014_Slab Plan & Section.dgn
Plot Date: 7/21/2015

STATE	PROJECT NO.	YEAR	SHEET NO.	TOTAL SHEETS
KANSAS	52 C-4611-01	2015	30	64

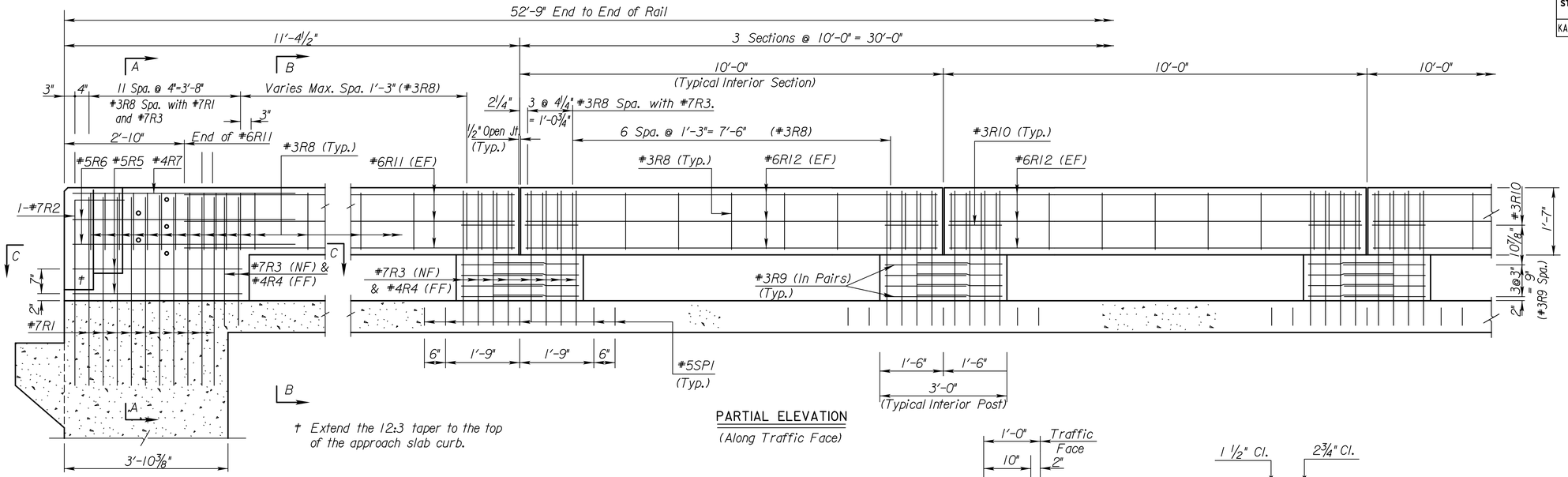

† Extend the 12:3 taper to the top of the approach slab curb.

PARTIAL ELEVATION

(Along Traffic Face)

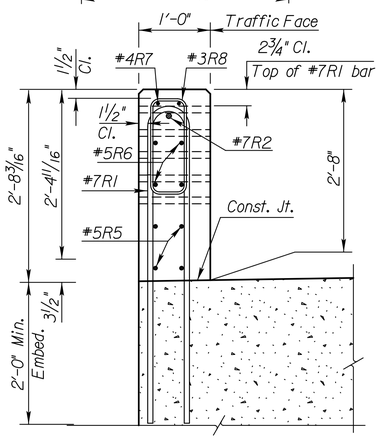

SECTION A-A

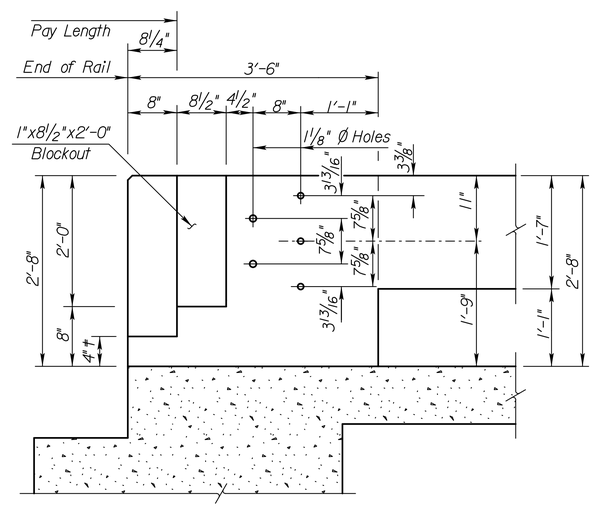

ELEVATION

(Dimensions at traffic face of rail.)

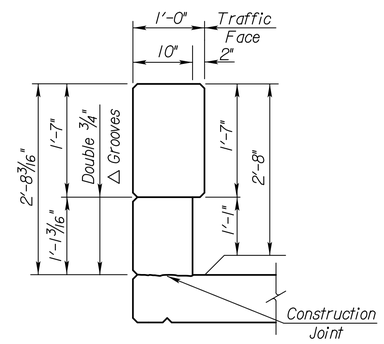

TYPICAL INTERIOR POST

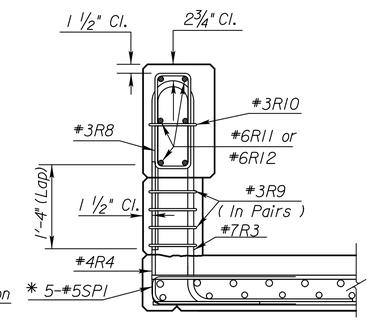

SECTION THRU POST

* Note: The hook may be canted to provide clearance and/or fit between reinforcing.

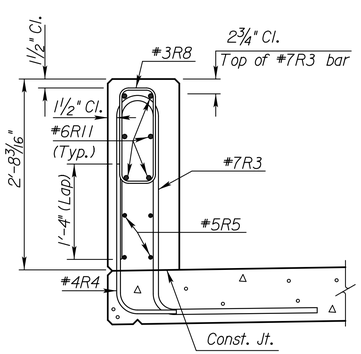

SECTION B-B

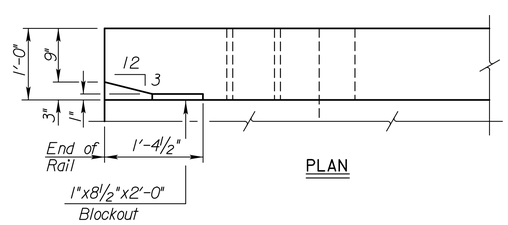

PLAN

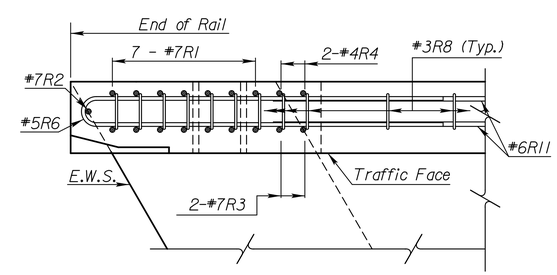

SECTION C-C

Wingwall not shown for clarity.

NO.	DATE	REVISIONS	BY	APP'D
3				
2				
1	6-30-05	Current Release		

KANSAS DEPARTMENT OF TRANSPORTATION

Br. No. 000521057303904 Sta. 13+20.28

32" KANSAS CORRAL RAIL (WITHOUT CURB)
CEMETERY ROAD OVER DAWSON CREEK

Proj. No. 52 C-4611-01 Leavenworth Co.

SHEET NO. OF	SCALE	APP'D	
DESIGNED	DETAILED	QUANTITIES	CADD
DESIGN CK.	DETAIL CK.	QUAN. CK.	CADD CK.

Std. Base File: br182c.dgn
Plotted By: bblizzard
Plot Location:
File: G:\12902\MicroBridge\12902R8601_015_Barrier.dgn
Plot Date: 7/21/2015

STATE	PROJECT NO.	YEAR	SHEET NO.	TOTAL SHEETS
KANSAS	52 C-4611-01	2015	31	64

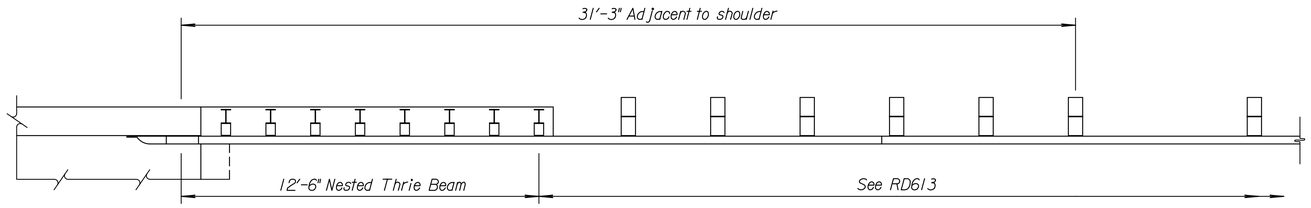

PARTIAL PLAN

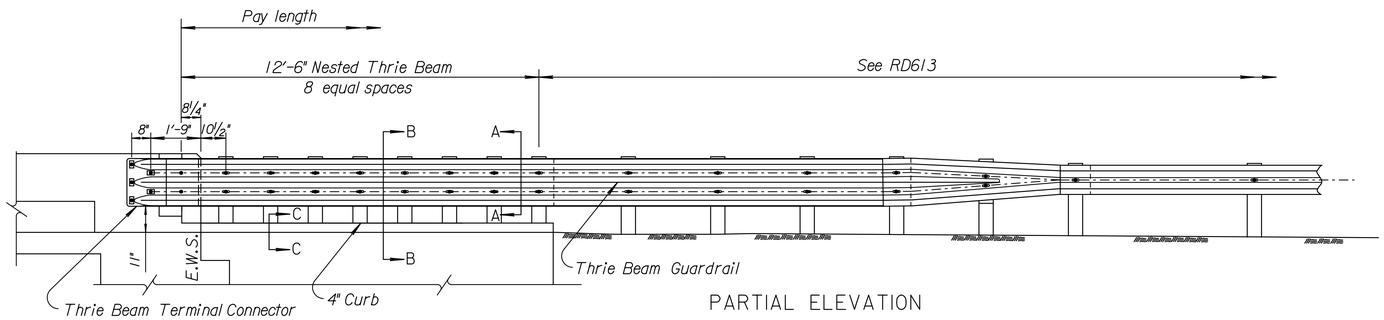

PARTIAL ELEVATION

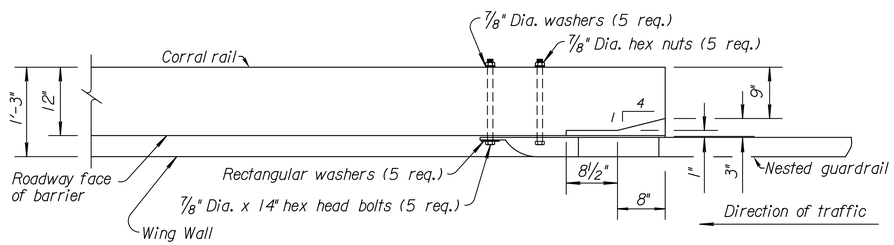

PLAN VIEW
GUARDRAIL ATTACHMENT
TO CORRAL RAIL

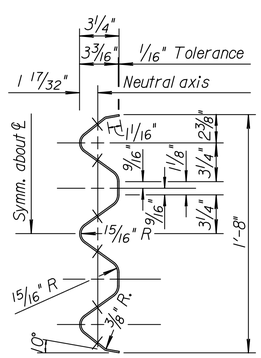

SECTION A-A THRU RAIL ELEMENT
TYPICAL THRIE BEAM

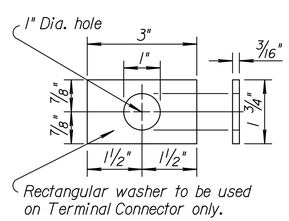

RECTANGULAR WASHER
(Other approved washer may be used.)

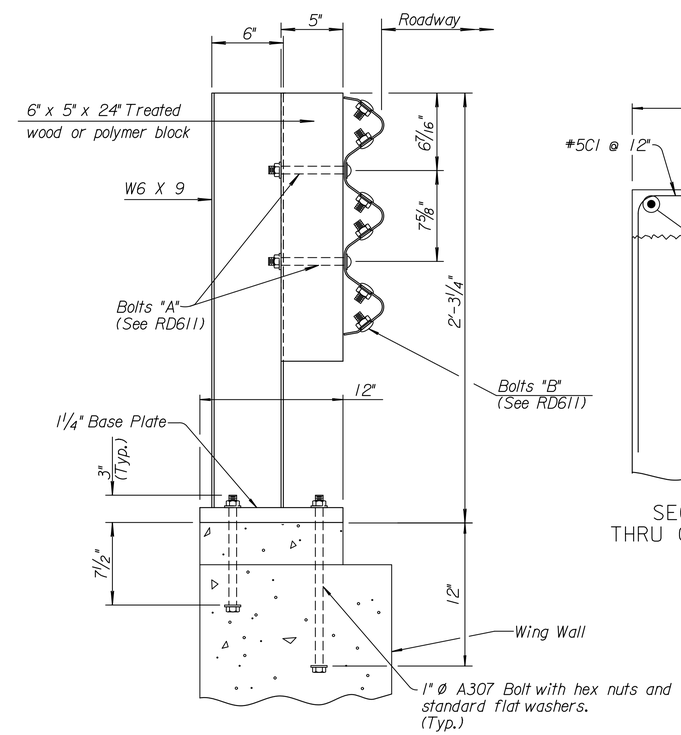

SECTION B-B

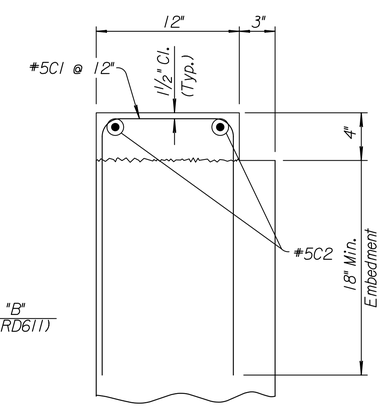

SECTION C-C
THRU CURB ON WING

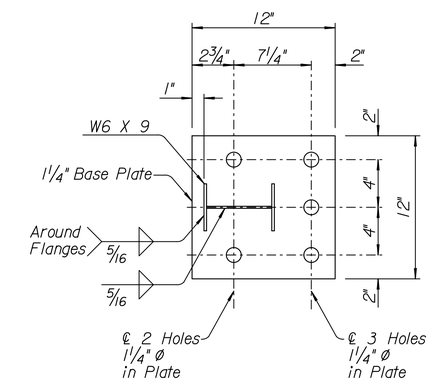

BASE PLATE

GENERAL NOTES

Use galvanized 12 gauge steel rail elements unless otherwise noted. Use galvanized anchor bolts and post rail fittings, see Standard Specifications. Supply guard rail parts that are interchangeable with similar parts regardless of source or manufacturer.

Fabricate Terminal Connector from 10 gauge steel, see standard specification. The connector has the same section as thrie beam guardrail Terminal connector is subsidiary to the bid item "Steel Plate Guardrail".

Shop curve rails when radius is less than 150'.

Lap guardrail splices, including terminal connector, in the direction of traffic. Where traffic is temporarily carried in the opposite direction of final configuration, lap rail splices in the direction of permanent traffic.

Bridge to guardrail transition consists of 1- 25'-0" Thrie beam with 1- 12'-6" Thrie beam section nested in back of 25'-0" section (see layout), & 1- Thrie beam to W-beam Asymmetrical transition section. Use associated hardware with post spacing shown. Use w-beam guardrail with 6'-3" post spacing with rail furnished in 12'-6" or 25'-0" sections.

All material and work required for this installation are paid under the bid item "Steel Plate Guardrail".

Posts and base plates shall be fabricated from ASTM A709 Grade 36 steel and galvanized.

For additional details, see Standard Guardrail Sheets.

NO.	DATE	REVISIONS	BY	APP'D
3				
2				
1				

KANSAS DEPARTMENT OF TRANSPORTATION

Br. No. 000521057303904 Sta. 13+20.28

DETAILS OF THRIE BEAM
GUARDRAIL AT WINGWALL

Proj. No. 52 C-4611-01 Leavenworth Co.

SHEET NO. OF	SCALE	APP'D	
DESIGNED	DETAILED	QUANTITIES	CADD
DESIGN CK.	DETAIL CK.	QUAN. CK.	CADD CK.

Plotted By: bblizzard Plot Location:
File: G:\12902\MicroBridge\12902RB601_016_Thrie Beam Guardrail.dgn
Plot Date: 7/21/2015

STATE	PROJECT NO.	YEAR	SHEET NO.	TOTAL SHEETS
KANSAS	52 C-4611-01	2015	32	64

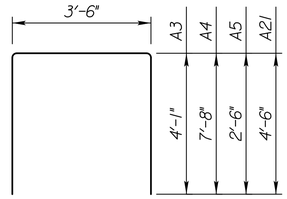

A3, A4, A5, A21

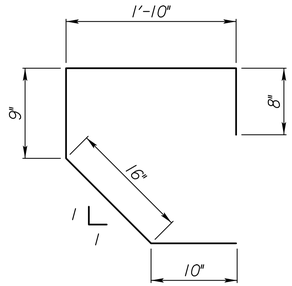

A6

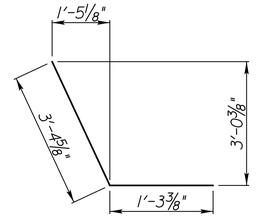

A10

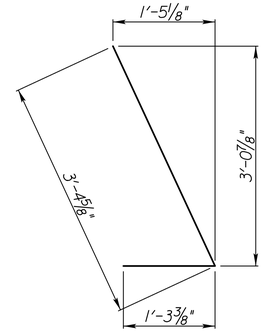

A11

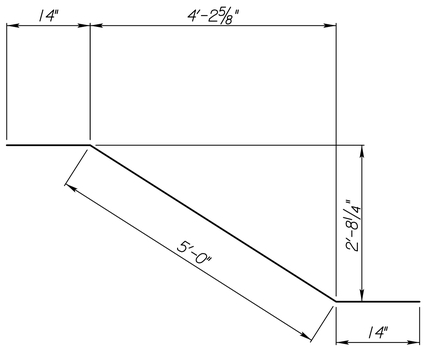

A14

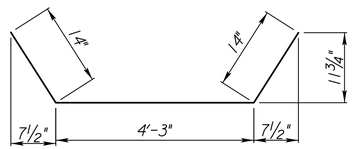

A15

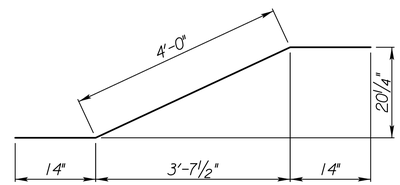

A16

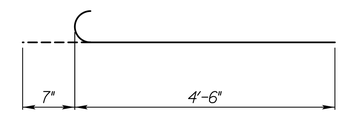

A12

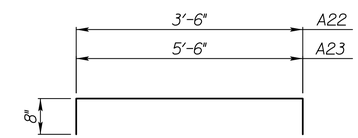

A22, A23

* A17	Varies from 8'-6" to 9'-0 1/2"
	Inc. = 1/2", 2 Series of 14 Bars
* A19	Varies from 7'-10 1/2" to 8'-5"
	Inc. = 1/2", 2 Series of 14 Bars
* A24	Varies from 7'-4 3/4" to 7'-8"
	Inc. = 1/4", 2 Series of 14 Bars
* A25	Varies from 7'-8 3/8" to 7'-11 5/8"
	Inc. = 1/4", 2 Series of 14 Bars

A17, A19, A24, A25

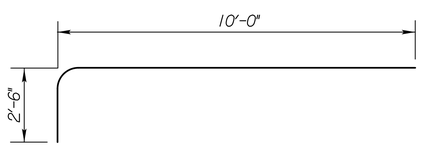

S4

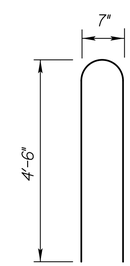

R1

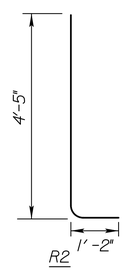

R2

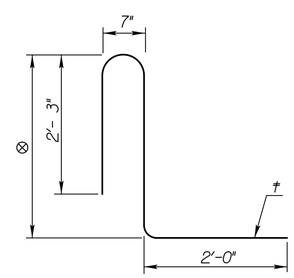

R3

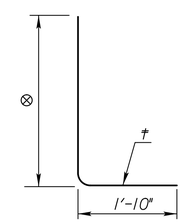

R4
(Lap 1'-4" with R3)

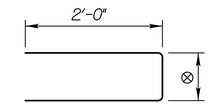

SP1

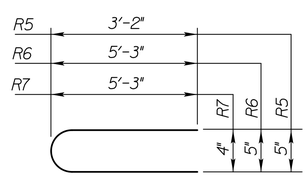

R5, R6, R7

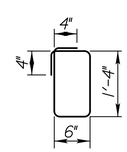

R8

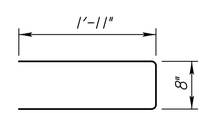

R9

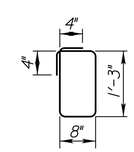

R10

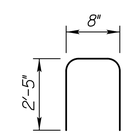

C1

BENDING DIAGRAMS

All dimensions are out to out of bars.

† Bend this leg to match the slope of the roadway.

⊗ These dimensions vary due to slope of deck or thickness of slab.

BILL OF REINFORCING STEEL
Non Epoxy Coated (Gr. 60)

Straight Bars				Bent Bars			
Mark	Size	Number	Length	Mark	Size	Number	Length
A1	#6	16	32'-9"	A3	#6	76	11'-8"
A2	#6	12	32'-9"	A21	#6	12	12'-6"
				A22	#4	72	4'-10"
				A23	#4	42	6'-10"

BILL OF REINFORCING STEEL
Epoxy Coated (Gr. 60)

Straight Bars				Bent Bars			
Mark	Size	Number	Length	Mark	Size	Number	Length
A18	#8	68	17'-4"	R1	#7	40	9'-3"
A20	#8	68	17'-9"	R2	#7	4	5'-7"
				R3	#7	72	7'-11"
A7	#6	8	32'-9"				
A8	#6	6	32'-9"	A4	#6	36	18'-10"
A9	#6	12	7'-10"	A5	#6	36	8'-6"
A17	#6	28	*	A10	#6	6	4'-8"
A19	#6	28	*	A11	#6	6	4'-8"
A24	#6	28	*	A14	#6	16	7'-4"
A25	#6	28	*	A15	#6	16	6'-7"
R11	#6	24	9'-5"	A16	#6	12	6'-4"
R12	#6	36	9'-8"				
				C1	#5	60	5'-6"
C2	#5	8	14'-0"	R5	#5	8	6'-6"
S1	#5	90	32'-8"	R6	#5	8	10'-8"
S2	#5	180	3'-2"	S4	#5	58	12'-6"
S3	#5	40	52'-2"	SP1	#5	40	4'-5"
A13	#4	2	32'-9"	A6	#4	54	5'-5"
				A12	#4	54	5'-1"
				R4	#4	72	4'-1"
				R7	#4	4	10'-8"
				R8	#3	158	4'-4"
				R9	#3	64	4'-6"
				R10	#3	16	4'-6"

*See Bending Diagrams

NO.	DATE	REVISIONS	BY	APP'D
3				
2				
1				

KANSAS DEPARTMENT OF TRANSPORTATION

Br. No. 0005210573039 04 Sta. 13+20.28

BILL OF REINFORCING STEEL
AND BENDING DIAGRAMS
CEMETERY ROAD OVER DAWSON CREEK

Proj. No. 52 C-4611-01 Leavenworth Co.

SHEET NO. OF	SCALE	APP'D	
DESIGNED	DETAILED	QUANTITIES	CADD
DESIGN CK.	DETAIL CK.	QUAN. CK.	CADD CK.

Plotted By: bblizzard | Plot Location:
File: G:\V2902\Micro\Bridge\V2902R8601_017_KDOTBAR.dgn
Plot Date: 7/21/2015

STATE	PROJECT NO.	YEAR	SHEET NO.	TOTAL SHEETS
KANSAS	52 C-4611-01	2015	33	64

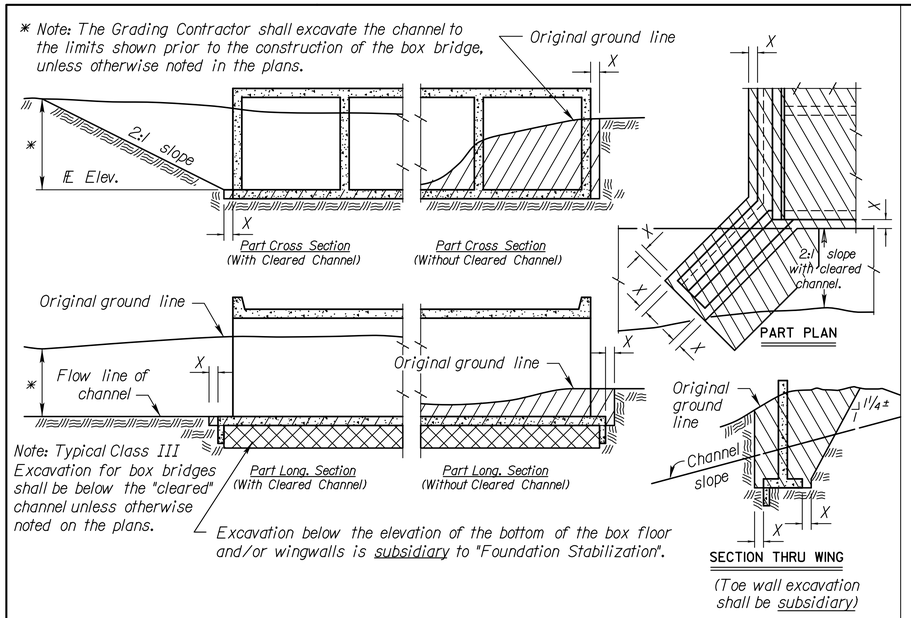

EXCAVATION DETAILS FOR REINFORCED CONCRETE BOX CULVERT

Note: Excavation for culverts less than bridge length and the additional excavation for "Embedded Structures" shall not be paid for as Class III Excavation, but shall be subsidiary to Grade 4.0 Concrete.

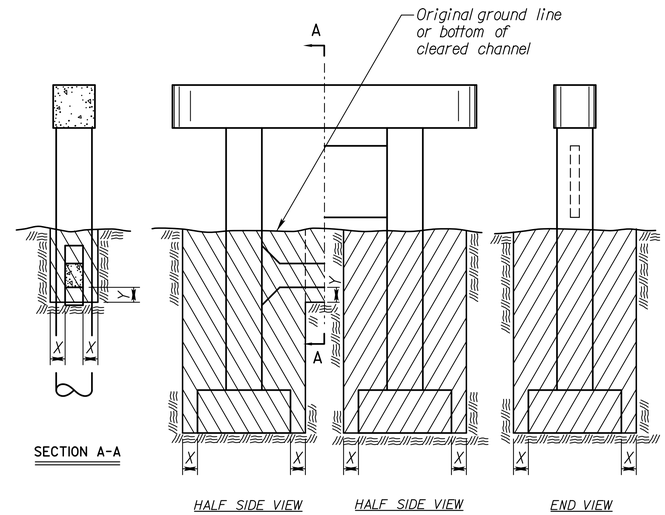

EXCAVATION DETAILS FOR TYPICAL PIERS

See detail when rock or shale (rock) is encountered. ⊛

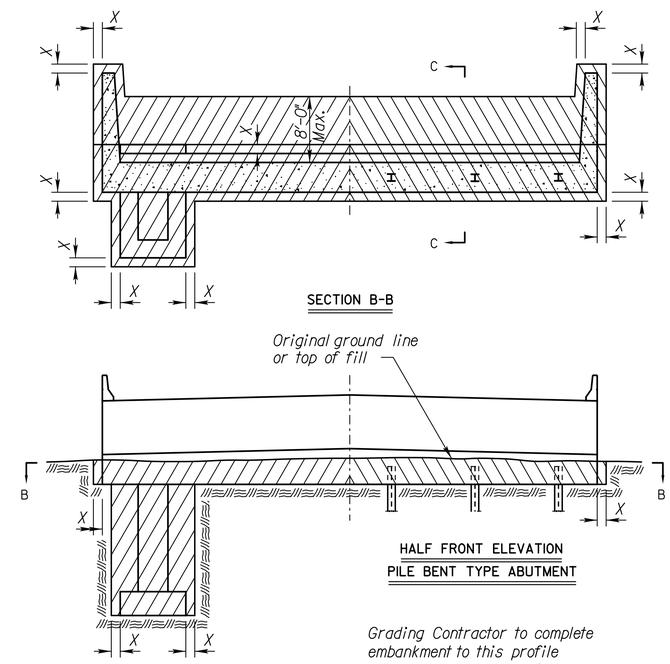

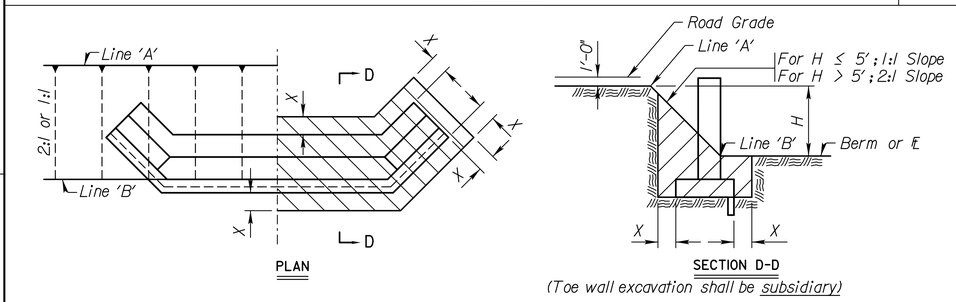

EXCAVATION DETAILS FOR ABUTMENTS WITH FLARED WINGWALLS

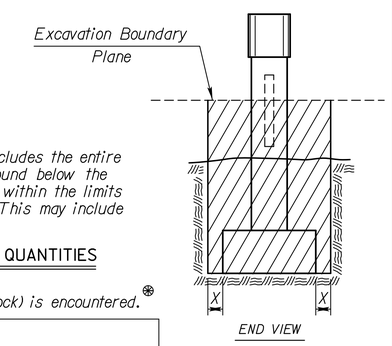

Note: Class II Excavation includes the entire volume of whatever nature found below the "Excavation Boundary Plane", within the limits specified for measurement. This may include water or air.

CLASS II EXCAVATION QUANTITIES

See detail when rock or shale (rock) is encountered. ⊛

Grading Contractor to complete embankment to this profile prior to construction of the abutment

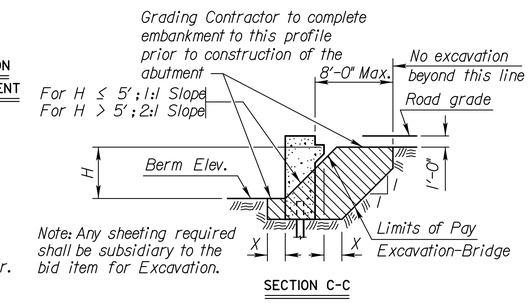

Note: Bridge Contractor shall finish the embankment and berms after the construction of the abutment and dispose of any excess material as approved by the Engineer.

Note: Any sheeting required shall be subsidiary to the bid item for Excavation.

EXCAVATION DETAILS FOR TYPICAL ABUTMENTS

See detail when rock or shale (rock) is encountered. ⊛

Note: All bridge excavation shall be computed on the basis of the cross-hatch areas and boundary lines indicated on this sheet and the Excavation Boundary Plane on the Construction Layout.

Sides of trenches in hard or compacted soil including embankments shall be shored, sheeted, braced or otherwise supported when the trench is more than 5 feet in depth and 8 feet or more in length. In lieu of the shoring, the sides of the trench above the 5 foot level may be sloped to preclude collapse. The slope for average soils shall be 1:1. If the angle of repose of the soil is less, flatter slopes shall be required.

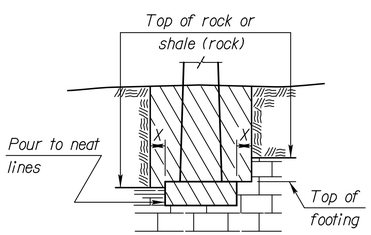

⊛ EXCAVATION DETAIL FOR FOOTINGS IN ROCK OR SHALE (ROCK)

(Piers and Abutments)

Note: Excavation below top of rock, hard shale or below top of footing, whichever is lower, shall be to neat lines of the concrete construction.

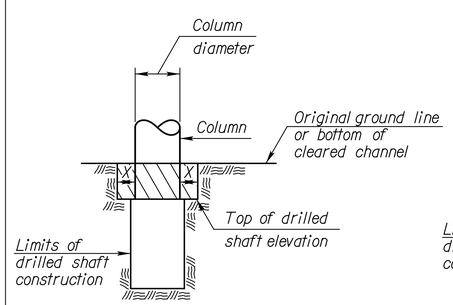

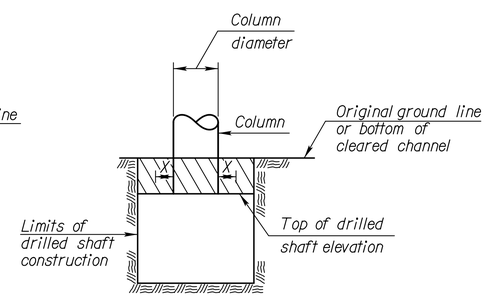

DRILLED SHAFT DETAILS

Note: Whenever the limits of the drilled shaft construction are greater than the Column Diameter + 2X, the limits of Class I, II or III Excavation shall be the limits of the drilled shaft construction. (See Detail B)

Dimension "X" shall be 2'-0" unless indicated otherwise on the general plans.

Dimension "Y" shall be 1'-6" unless indicated otherwise on the general plans.

NO.	DATE	REVISIONS	BY	APP'D
7				
6	8-15-12	Embeddement Excavation Subsidiary	JPJ	TLF
5	5-15-12	Revised Wing Excavation	JPJ	TLF
4	3-3-10	Revised Wing Excavation	JPJ	TLF
3	10-16-06	Revised "Foundation Stab." Note	JPJ	KFH
2	10-19-04	Concrete - Class to Grade	RAM	KFH
1	4-10-02	Added "Foundation Stab." Note	RAM	KFH

KANSAS DEPARTMENT OF TRANSPORTATION

Br. No. 000521057303904 Sta. 13+20.28

BRIDGE EXCAVATION (LRFD)

Proj. No. 52 C-4611-01 Leavenworth Co.

SHEET NO. OF	SCALE	APP'D	
DESIGNED	DETAILED	QUANTITIES	CADD
DESIGN CK.	DETAIL CK.	QUAN. CK.	CADD CK.

Plotted By: bblizzard Plot Location:
File: G:\V2902\Micro\Bridge\V2902R860I_01B_Excavation.dgn
Plot Date: 7/21/2015

STATE	PROJECT NO.	YEAR	SHEET NO.	TOTAL SHEETS
KANSAS	52 C-4611-01	2015	34	64

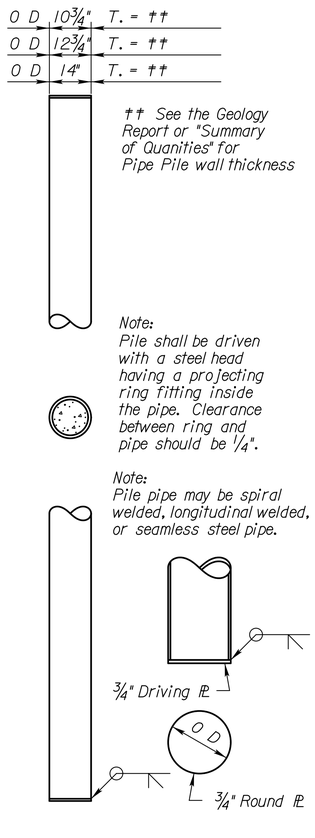

PLAIN ROUND CAST-IN-PLACE CONCRETE PILES

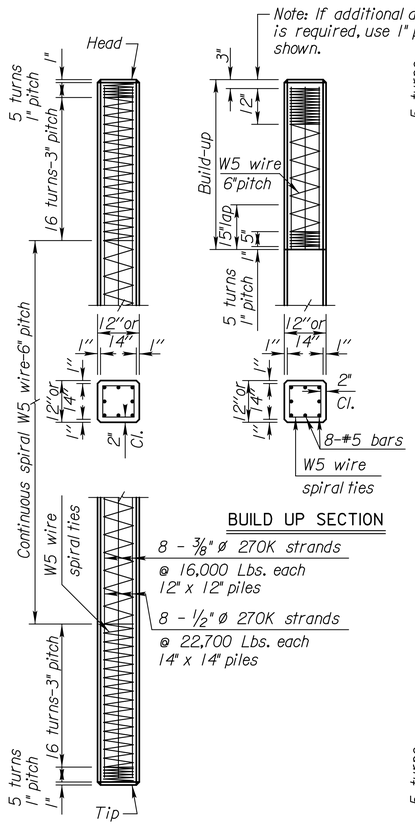

BUILD UP SECTION

12" OR 14" PRESTRESSED CONCRETE PILES

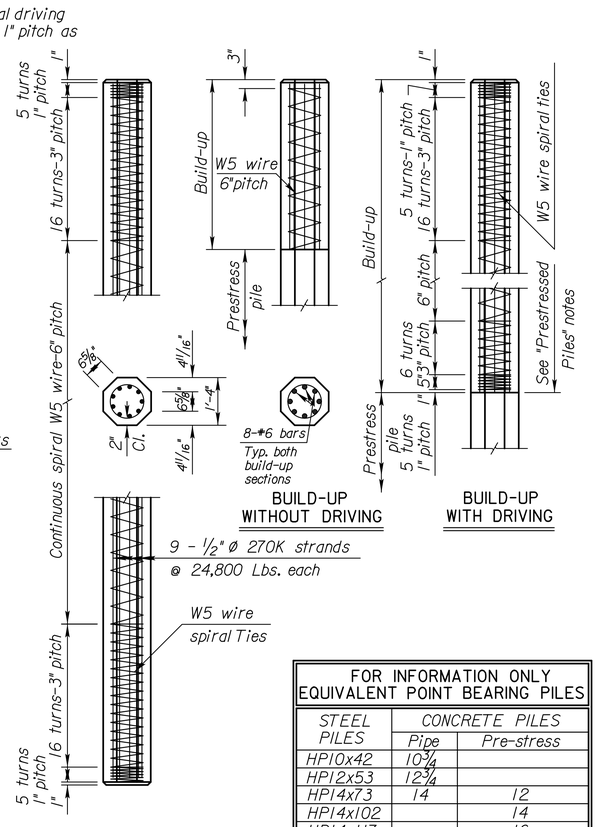

BUILD-UP WITHOUT DRIVING

BUILD-UP WITH DRIVING

16" PRESTRESSED CONCRETE PILES

FOR INFORMATION ONLY EQUIVALENT POINT BEARING PILES		
STEEL PILES	CONCRETE PILES	
	Pipe	Pre-stress
HP10x42	10¾	
HP12x53	12¾	
HP14x73	14	12
HP14x102		14
HP14x117		16

GENERAL NOTES

PRESTRESSED PILES: Fabricate prestressed concrete pile splices in accordance with the Manufacturer's recommendations subject to the approval of the Engineer.

Method of attachment of pile to build-up may be by any of the methods" given in the notes on "Alternate Methods. If mild reinforcing steel is used for attachment,the area shall be no less than that used in the build-up.

ALTERNATE METHODS: Method of attachment of a pile to build-up may be by any of the following methods:
1. Cut off at least 2'-0" of pile and expose a minimum of 2'-0" of strands.
2. Cast 8-#6, or 8-#5 bars (equally (spaced into pile head. All bars shall extend into pile head and project from extend into pile head and project from the pile head a minimum of 2'-0".
3. Drill 8 holes in pile head (equally spaced) for installation of 8 grouted dowel bars of same size and length as in 2.
4. Provide cored holes for bars as in 3.
No bars or strands are to extend from head of pile or build-up into footing or pile cap unless approved by the Engineer.

TEST PILES: Drive test piles where called for on the bridge plans. The test piles located within the limits of the substructure will become a part of the bridge pile system.

DRIVING FORMULA: Driving formula shall conform to the Standard Specifications.

MEASUREMENT AND PAYMENT: Measurement and payment for all piles shall comply with the Standard Specifications.

The following items are covered in Division 1000 of the Standard Specifications:

REINFORCEMENT: Use reinforcing steel conforming to ASTM A615, Grade 60. Hoops and spirals may be either plain or deformed bars.

PRESTRESSING STEEL: Use uncoated seven-wire stress relieved or low relaxation prestressing strand conforming to ASTM A416, Gr. 270.

SPECIFICATIONS: Standard Specifications for State Road and Bridge Construction as currently used by the Kansas Department of Transportation. The following items are covered in Division 700 of the Standard Specifications:

CONCRETE: Concrete for cast-in-place shall be f'c = 3,500 PSI.. Concrete for prestressed shall be f'c = 5,000 PSI.

WELDING: All field welding shall meet the requirements of the Standard Specifications.

Use only Shielded Metal Arch Welding SMAW (stick welding) for pile splices.

Use only low hydrogen E7018, 7016, or 7015 series welding rod (electrode) for all welding applications during pile splicing. See General Notes or proper storage of welding rod. welding filler rod (electrode) for field welding of splices.

New electrode are to be purchased for each KDOT project. The electrode shall arrive on the project in factory hermetically sealed containers opened and labeled with indelible ink in front of the engineer. The label shall include the current date and the project number. If the container seal is questionable or shows signs of damage the electrode is to be dried in an oven at least one hour at a temperature of 700°F to 800°F.

Upon removal from intact hermetically sealed factory packaging or the drying oven the electrode is to be placed in a storage oven with a minimum temperature of 250°F.

When electrodes are removed from the hermetically sealed container or storage oven and exposed to the atmosphere for less than 4 hours place into the storage oven for at least 4 hours before removing for use.

If electrode is exposed to the atmosphere for 4 hours or more (or 9 hours for moisture resistant electrodes designated with an R in their labeling) then electrode can be dried in a drying oven at a temperature of 450°F to 550°F.

If the electrode is exposed to the atmosphere for 4 hours or more a second time or the rod becomes wet discard rod.

CAST-IN-PLACE SHELLS: Steel shells for cast-in-place piles shall conform to the requirements of the Standard Specifications.
All piles driven without a mandrel shall be of the minimum thicknesses shown. Piles driven with a mandrel shall be of sufficient strength and thickness to withstand driving without injury and to resist harmful distortion and/or buckling due to soil pressure after the mandrel is removed.
Remove, replace or correct to the satisfaction of the Engineer improperly driven, broken or otherwise defective pipe piles. Otherwise drive an additional pile at no extra cost.
The Contractor shall maintain a light suitable for visual inspection of the pile on the job at all times prior to and during the filling of the pipe.

STEEL PILE: Steel pile shall conform to the requirements of the Standard Specifications.

PILE POINTS: Pile points shall conform to the dimensions shown and to requirements of the Standard Specifications.

PAINT: All paint shall comply with the Standard Specifications, or as specified on the plans.

MILL TEST REPORTS: Steel piles test reports and steel shell test reports shall comply with the Standard Specifications.

CAST STEEL PILE POINT

The pile point shall be a one-piece unit of cast steel. Weld pile points in accordance with manufacturers recommendations to each steel pile before driving.

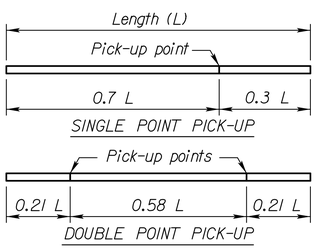

PICK-UP POINTS FOR PRESTRESSED PILING

Max. length - 55' single point pick-up
Max. length - 80' double point pick-up

Note: Piles shall be marked at Pick-up points to indicate proper points for attaching handling lines.

PIPE PILE POINT

Weld Symbology Definition

Use grinder to bevel edges of splice as shown in weld symbology and drawing. In addition to bevels, produce clean, bare, and shiny surfaces at and around the splice welding location.

Use E7018, 7016, or 7015 series welding rod (electrode) for all welding applications during pile splicing. See General Notes for proper storage of welding rod.

Lay full penetration root weld from beveled side of splice.

Back gouge root weld from side opposite of root welding application making sure to remove all foreign materials, porous steel, and inclusions from root weld. Finish welding the non beveled side of the splice.

Finish welding beveled side of the splice while removing slag, foreign materials, porous steel, and inclusions in between welding passes, use of a grinder may be needed.

Verify that enough filler metal has been correctly placed in all weld locations to obtain a flush or convex surface with no concavity produced upon completion of the final welds.

SPLICES: Splices for steel piles and shell piling shall be in accordance with details shown on this sheet and the Standard Specifications.

For integral pile bent abutments and piers, if a pile splice is required, do not locate the pile splice within a region extending 2'-0" above and 10'-0" below the bottom of the concrete web wall. For abutments, locate the pile splice at least 10'-0" below the bottom of concrete.

With the approval of the Engineer, one splice per bent may be allowed in the region described above without testing. If additional splices are anticipated, based on the geology, the Contractor will add a sufficient amount to the bottom of pile, prior to driving, so that the splice is below the regions described above in the completed pile.

† For integral pile bent abutments and piers, if a splice is located within the regions described above, then the Contractor will test the welds by Radiograph (RT) test methods. Repair and retest any welds not passing the test(s). Each weld tested will have written confirmation of results. Report these results to the Engineer. This work is not paid for directly, but is subsidiary to "Piles".

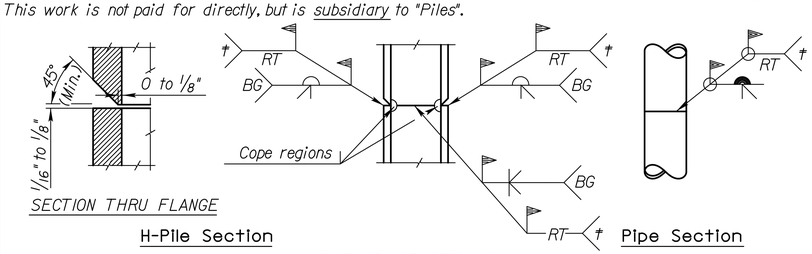

NO.	DATE	REVISIONS	BY	APP'D
4	06-18-12	Clarify f'c, rod type, use and weld	JPJ	TLF
3	1-5-09	Pile Splice Location and Weld Test	JPJ	KFH
2	6-14-06	Rev. Pile Splice Note & Reinforcing	JPJ	KFH
1	11-12-03	Revised Notes	RAM	KFH

KANSAS DEPARTMENT OF TRANSPORTATION
Br. No. 0005210573039 04 Sta. 13+20.28

STANDARD PILE DETAILS

Proj. No. 52 C-4611-01 Leavenworth Co.

SHEET NO. OF	SCALE	APP'D	
DESIGNED	DETAILED	QUANTITIES	CADD
DESIGN CK.	DETAIL CK.	QUAN. CK.	CADD CK.

Plotted By: bblizzard Plot Location:
File: G:\12902\MicroBridge\12902R8601_019_Pile Details.dgn
Plot Date: 7/21/2015

STATE	PROJECT NO.	YEAR	SHEET NO.	TOTAL SHEETS
KANSAS	52 C-4611-01	2015	35	64

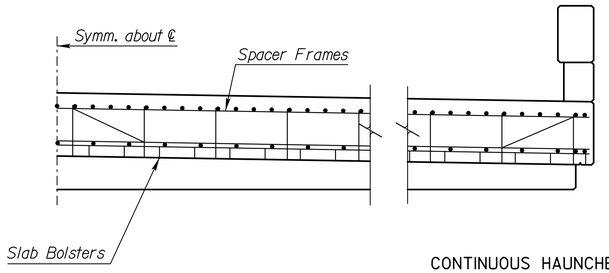

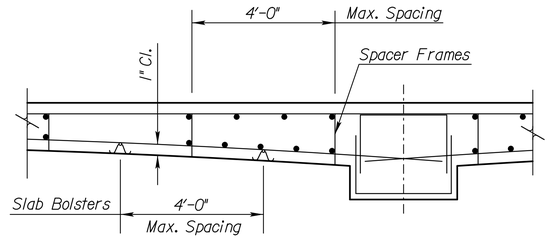

CONTINUOUS HAUNCHED SLAB

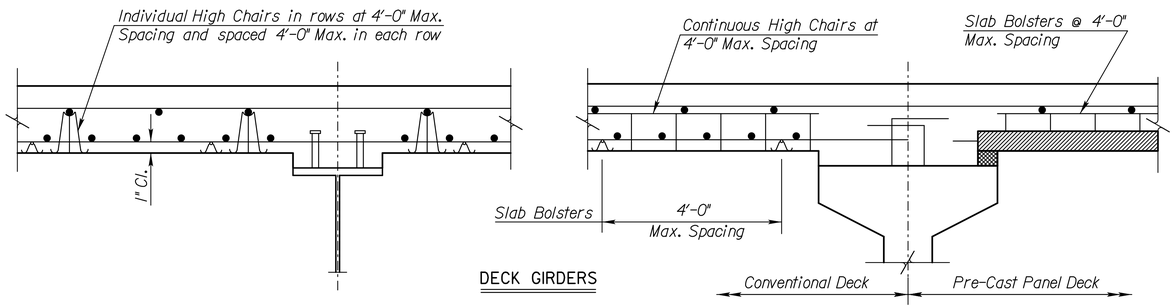

DECK GIRDERS

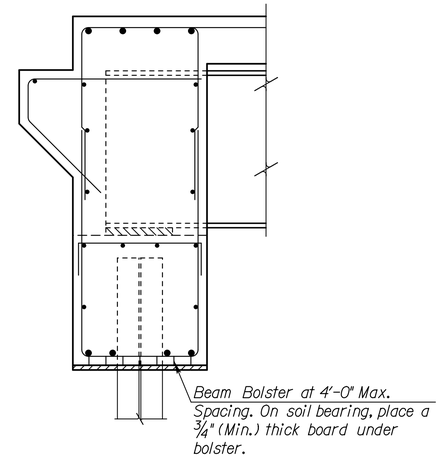

ABUTMENT

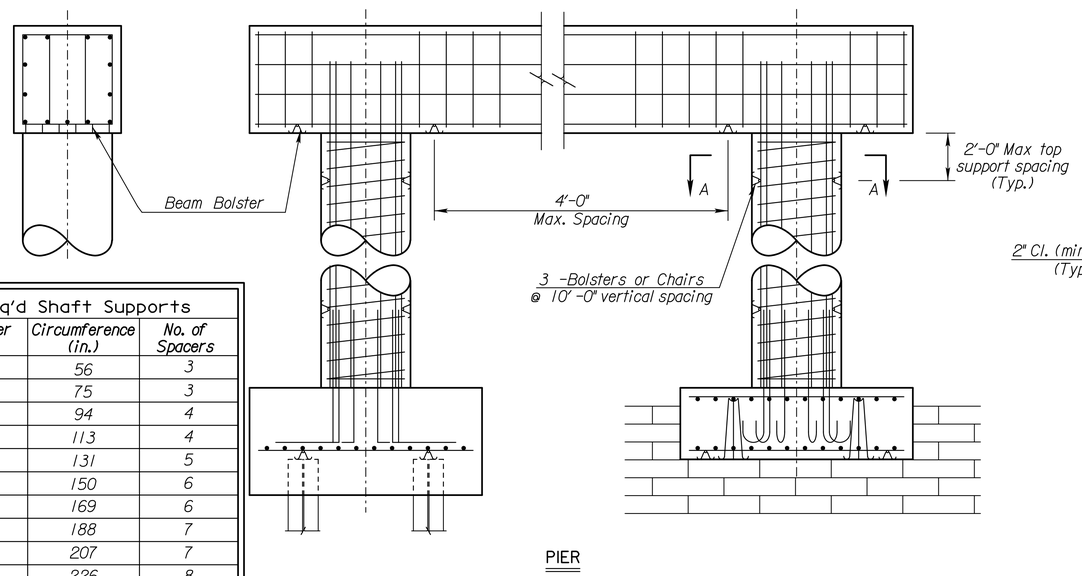

PIER

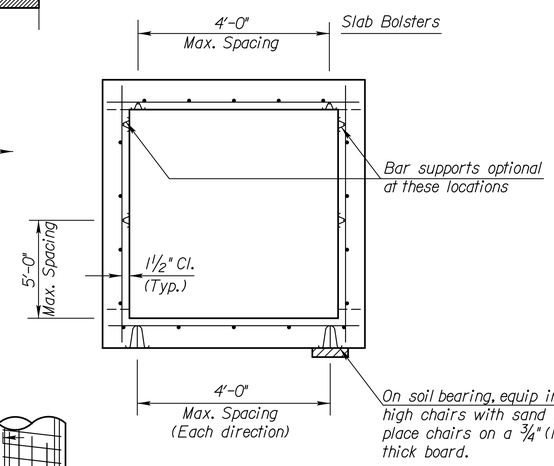

BOX CULVERT

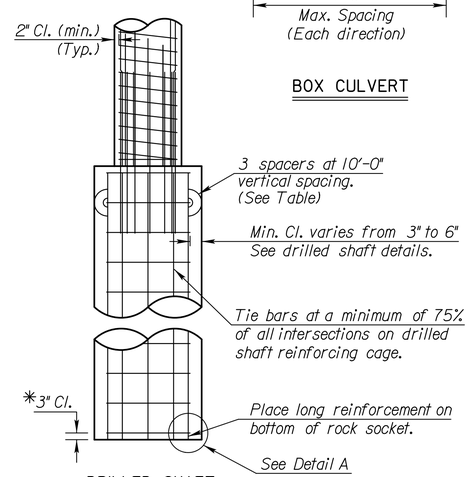

DRILLED SHAFT

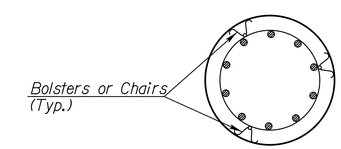

SECTION A-A

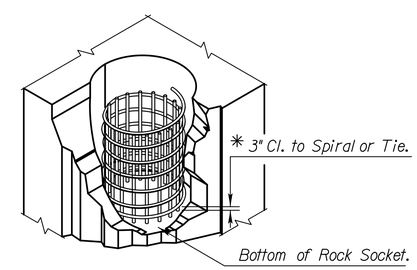

DETAIL A

* Note: Longitudinal reinforcing steel is placed on the bottom of the rock socket. Maintain 3" clearance from the bottom of rock socket to the first spiral or tie bar.

GENERAL NOTES

Reference is made to the latest edition of the CRSI "Manual of Standard Practice" for recommended industry practices concerning reinforcing steel.

Use only the following types of bar supports:

1) Wire Bar Supports:

a) Epoxy coated reinforcing: Class 1 Protection
b) Non-epoxy coated reinforcing: Class 1, 2, or 3 Protection

2) Plastic Bar Supports

3) Supplementary bars

When securing epoxy coated reinforcement, use tie wires or metal clips that are epoxy or plastic coated.

Do not weld reinforcing steel to bar supports or to other reinforcing steel. Shop weld spacer frames for haunched slabs.

Tie bars at all intersections around the perimeter of each mat and at not less than 2'-0" centers or at every intersection, whichever is greater.

Where more than one length of bar support is required, lap the end legs so they are locked or tied together.

Use proper height supports to maintain the distance between the reinforcing and the formed surface or the top surface of deck slabs within 1/4" of that indicated on the plans.

Spacings shown are maximums. Use sufficient supports, as determined by the Engineer, to retain the reinforcing steel in position.

Construct any platforms, required for the support of workers and/or equipment during concrete placement, directly on the forms and not on the reinforcing steel.

Designs and arrangements of Supports or Spacers other than as shown on this sheet, may be used with the permission of the Engineer.

Req'd Shaft Supports

Diameter (in.)	Circumference (in.)	No. of Spacers
18	56	3
24	75	3
30	94	4
36	113	4
42	131	5
48	150	6
54	169	6
60	188	7
66	207	7
72	226	8
78	244	9
84	263	9
90	282	10
96	301	11
102	320	11
108	339	12

NO.	DATE	REVISIONS	BY	APP'D
5	11-10-10	Column Bar Supports Req'd	JPJ	TLF
4	12-01-05	Drilled Shaft Spiral Steel Placement	JPJ	KFH
3	8-21-00	Added Pre-Cast Panel Detail	RAM	KFH
2	12-20-99	Added Haunched Slab Bolsters	RAM	KFH
1	12-09-99	Revised Drilled Shaft Clearance	RAM	KFH

KANSAS DEPARTMENT OF TRANSPORTATION

Br. No. 000521057303904 Sta. 13+20.28

SUPPORTS AND SPACERS FOR REINFORCING STEEL

Proj. No. 52 C-4611-01 Leavenworth Co.

SHEET NO. OF	SCALE	APP'D	
DESIGNED	DETAILED	QUANTITIES	CADD
DESIGN CK.	DETAIL CK.	QUAN. CK.	CADD CK.

Plotted By: bblizzard Plot Location:
File: G:\12902\MicroBridge\12902R8601_020_Supports&Spacers.dgn
Plot Date: 7/21/2015

STATE	PROJECT NO.	YEAR	SHEET NO.	TOTAL SHEETS
KANSAS	52 C-4611-01	2015	36	64

RECAPITULATION OF ROAD QUANTITIES

ITEM	QUANTITY	UNIT
Contractor Construction Staking	L.S.	LUMP SUM
Mobilization	L.S.	LUMP SUM
Removal of Existing Structures	L.S.	LUMP SUM
Clearing and Grubbing	L.S.	LUMP SUM
Unclassified Excavation	2,183	CU. YD.
Compaction of Earthwork (Type B) (MR-90)	420	CU. YD.
Surfacing Material (AB-3)	544	TONS
Concrete Pavement (10" Uniform) (AE)	88	SQ. YD.
Guardrail, Steel Plate	150	L.F.
Guardrail End Terminal (SRT) Alt. 1	2	EACH
Guardrail End Terminal (FLEAT) Alt. 2	2	EACH
Guardrail End Terminal (SKT) Alt. 1	2	EACH
Guardrail End Terminal (X-LITE) Alt. 2	2	EACH
Field Office and Laboratory (Type C)	1	EACH
Foundation Stabilization (Set Price)	1	CU. YD.
Mobilization (DBE)	L.S.	LUMP SUM
Concrete for Seal Course (Set Price)	1	CU. YD.
Temporary Surfacing Material (Aggregate) (Set Price)	1	CU. YD.
Water (Grading) (Set Price)	1	MGAL
Curing Environment	L.S.	LUMP SUM

For Summary of Guardrail Quantities, See Sh. No. 8
For Temporary Erosion Control Quantities, See Sh. No. 37
For Seeding Quantities, See Sh. No. 45
For Signing Quantities, See Sh. No. 51
For Traffic Control Quantities, See Sh. No. 59

SUMMARY OF SURFACING QUANTITIES

LOCATION	STATION FROM	STATION TO	SIDE	DEPTH (IN.)	SURFACING MATERIAL (AB-3) (TONS) *
Cemetery Rd.	11+25.00	12+86.09	℄	8	204
Cemetery Rd.	13+54.47	16+25.00	℄	8	340
			TOTALS		544

* COMPUTED AT THE RATE OF 145 LBS/CU. FT.

CONCRETE PAVEMENT (10") (AE) (BRIDGE APPROACH)

LOCATION	STATION FROM	STATION TO	SIDE	BRIDGE APPROACH (10") (AE) (SQ. YD.)
Cemetery Rd.	12+73.03	13+00.32	℄	43.9
Cemetery Rd.	13+40.24	13+67.52	℄	43.9
			TOTALS	87.8

RECAPITULATION OF BRIDGE QUANTITIES

BRIDGE NUMBER	STATION	SEE SHEET NO.
000521057303904	13+20.28	16

EARTHWORK

STATION to STATION	EXCAVATION UNCLASSIFIED CU.YDS.	EXCAVATION UNCLASSIFIED VMF	EXCAVATION ROCK CU.YDS.	EXCAVATION ROCK VMF	EXCAVATION CONTR. FURN. CU.YDS.	COMPACTION TYPE B MR-90 CU.YDS.			THROUGH CUTS NOT SUBGRADED UNCLASS. CU. YDS.	THROUGH CUTS NOT SUBGRADED TYPE B MR-90 CU.YDS.		* EMBANKMENT (CU.YDS.) INITIAL CONSOL.	* EMBANKMENT (CU.YDS.) SETTLE-MENT	▲PLACE. SELECT SOIL CU.YDS.
Balance 1														
Sta. 11+25 to Sta. 16+25	(1) 1,967	1.0				(2) 204			216	216				
TOTALS	1,967					204			216	216				

(1) Includes 538 C.Y. south of creek, 1429 C.Y. north of creek and 1763 C.Y. of waste.
(2) Includes 183 C.Y. south of creek and 21 C.Y. north of creek.

REMOVAL OF EXISTING STRUCTURES (FOR INFORMATION ONLY)

LOCATION	STATION	SIDE	ITEM	REMARKS
Cemetery Rd.	59+82	LT.	Br. No. 000521057303903	
Cemetery Rd.	11+42 - 12+90	LT.	Barbed Wire Fence (160 L.F.)	

THE LISTING MAY NOT BE COMPLETE. PAYMENT FOR OBSTRUCTIONS OR STRUCTURES NOT LISTED BUT WHOSE REMOVAL IS REQUIRED BY THE CONSTRUCTION, AS DETERMINED BY THE ENGINEER, SHALL NOT BE PAID FOR DIRECTLY, BUT SHALL BE INCLUDED IN THE BID ITEM "REMOVAL OF EXISTING STRUCTURES"

NO.	DATE	REVISIONS	BY	APP'D
2	1-14-08	Rem. Drainage Structure summary	S.W.K.	J.O.B.
1	1-9-91	Detailed on CADD	R.J.S	J.O.B.

KANSAS DEPARTMENT OF TRANSPORTATION

SUMMARY OF QUANTITIES

RD050

FHWA APPROVAL	5-28-08	APP'D. James O. Brewer	
DESIGNED	DETAILED	QUANTITIES	TRACED B.N.B.
DESIGN CK.	DETAIL CK.	QUAN.CK.	TRACE CK. S.W.K.

Drawn By : bblizzard Plotted : 7/21/2015
File : G:\12902\MicroHighways\12902R0401.dgn

STATE	PROJECT NO.	YEAR	SHEET NO.	TOTAL SHEETS
KANSAS	52 C-4611-01	2015	37	64

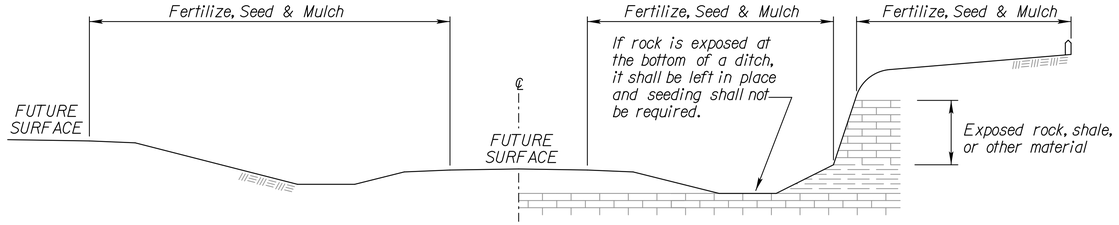

RAMP CUT SECTION

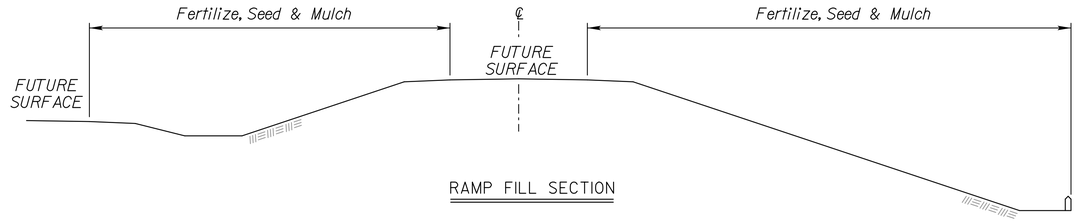

RAMP FILL SECTION

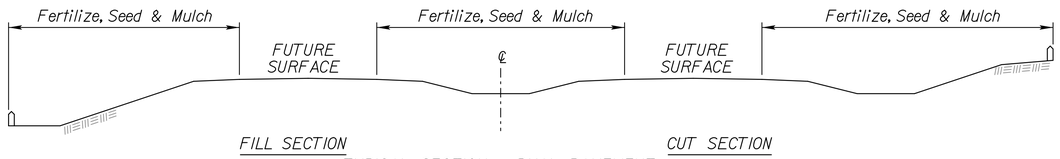

TYPICAL SECTION - DUAL PAVEMENT

FERTILIZER: A ratio and application rate that equals or exceeds the required minimum rate per acre of N, P_2O_5, K_2O listed in Summary of Quantities will be acceptable.

x - N = Nitrogen Rate of Application
xx - P_2O_5 = Phosphorous Rate of Application
xxx - K_2O = Potassium Rate of Application

The Contractor will be required to finish areas of excavation, borrow and embankment in accordance with the specifications. Areas that require installation or construction of temporary water pollution control items will be finished in reasonable close conformity to the alignment, grade and cross section shown on the plans or as established by the Engineer.

CLT = Construction Limit Tract. This area is defined by the entire disturbed area of the project that requires seeding and erosion control measures to be placed. Any impervious areas (i.e. pavement, gravel, riprap, etc.) shall not be included in this measurement.

Slope = Defined by the area of the project that requires Class 1 erosion control material to be placed. This area shall be seeded using the Soil Erosion Mix prior to placement of the material. Drilling seed is preferred, however, broadcasting is acceptable if drilling is not possible.

Channel = Defined by the area of the project that requires Class 2 erosion control material to be placed. This area shall be seeded using the Soil Erosion Mix prior to placement of the material. Drilling seed is preferred, however, broadcasting is acceptable if drilling is not possible.

Project will be bid as "Seeding" by the lump sum. All disturbed areas shall be seeded, fertilized and mulched at the listed rate per acre. The acres are estimated.

SUMMARY OF SEEDING QUANTITIES

P.L.S. RATE/ ACRE		ACRES		BID ITEM	QUANTITY	UNIT
CLT	SL/CH	CLT	SL/CH			
150		0.60		Temporary Fertilizer (15 - 30 - 15)		LB
20		0.60		Temporary Seed (Canada Wildrye)		LB
45		0.60		Temporary Seed (Grain Oats)		LB
45		0.60		Temporary Seed (Sterile Wheatgrass)		LB
				Soil Erosion Mix		LB
				Agricultural Limestone		TON
				Temporary Berm (Set Price)	1	LF
				Temporary Slope Drain		LF
				Temporary Stream Crossing	1	EACH
				Temporary Inlet Sediment Barrier		EACH
				Silt Fence	229	LF
				Biodegradable Log (****)		LF
				Synthetic Sediment Barrier		LF
				Filter Sock (****)		LF
				Temporary Ditch Check (Rock)	156.2	CU YD
				Temporary Sediment Basin		CU YD
				Sediment Removal (Set Price)	1	CU YD
				SWPPP Design †	Lump Sum	LS
				SWPPP Inspection †	????	EACH
				Water Pollution Control Manager †	????	EACH
				Erosion Control (Class 1, Type Y)		SQ YD
				Erosion Control (Class 2, Type Y)		SQ YD
900 lbs / acre		0.60		Mulch Tacking Slurry		LB
2 tons / acre		0.60		Mulching (Temporary)		TON
				Water (Erosion Control) (Set Price)	1	MGAL

NOTE: Projects less than 1 acre shall be bid as "Seeding" by the lump sum. All disturbed areas shall be seeded, fertilized and mulched at the listed rate per acre. The acres are estimated.

† If the total disturbed area of the project, not just the seeding area, is 1 acre or more, then these bid items must be included.

Regreen and Quick Guard are the approved sterile wheatgrass products.

xxxx List size of material.

GENERAL NOTES

The entire disturbed area, excepting the paved or surfaced areas, steep rocky slopes and areas of undisturbed native sod or other desirable vegetation shall be fertilized (limed when required), seeded, and mulched. Soil preparation shall conform to the Standard Specifications.

Temporary seeding shall be done during any time of the year that the soil can be cultivated. After the temporary seeding has been completed on the entire project, permanent seeding shall be done during the normal seeding season.

MULCHING: Mulch shall be spread uniformly over all disturbed areas and punched in the soil, unless otherwise noted on the plans. The rate of application per acre, thickness in place, for the mulching materials is as follows:

1¾ - 2¼ Tons per Acre = 1½" loose depth spread uniformly over acre.

Agricultural products, such as native prairie hay, used for mulching and erosion control practices, excluding wood based mulch, shall meet the North American Weed Free Forage Standards.
Other vegetative mulches are acceptable only with the Engineer's concurrence.

The above rate is a guide. It will be at the discretion of the Engineer to determine what rate is sufficient for adequate protection of newly seeded areas.

The amount of mulch and mulch tacking slurry in the bid quantities is estimated. The total mulch and mulch tacking slurry required shall be determined in the field. The bid item for mulching and mulch tacking slurry shall be paid for according to Standard Specification Section 904.

SOIL EROSION MIX

PLS RATE	NAME	QTY (lb)
	Total (lb)	

The Soil Erosion Mix is to be placed under the Class 1 and Class 2 (if used) erosion control material.

NO.	DATE	REVISIONS	BY	APP'D
3	4/06/15	Revised Standard	MRM	SHS
2	6/11/13	Revised Standard	MRM	SHS
1	6/01/13	Revised Standard	MRM	SHS

KANSAS DEPARTMENT OF TRANSPORTATION

TEMPORARY EROSION AND POLLUTION CONTROL

LA852A

FHWA APPROVAL		5/14/2013	APP'D		Scott H. Shields
DESIGNED	MRM	DETAILED	MRM	QUANTITIES	CADD
DESIGN CK.	SHS	DETAIL CK.	SHS	QUAN.CK.	CADD CK.

Std. Base File:
Plotted By: bblizzard Plot Location:
File: G:\V2902\Microx\Highways\1290212113-la852a.dgn
Plot Date: 7/21/2015

STATE	PROJECT NO.	YEAR	SHEET NO.	TOTAL SHEETS
KANSAS	52 C-4611-01	2015	38	64

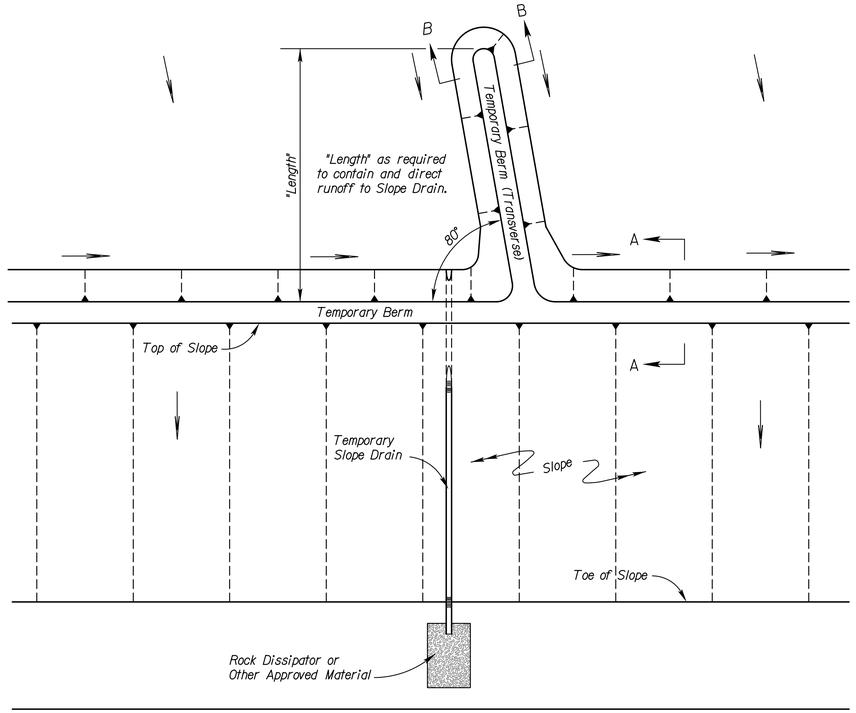

TYPICAL PLAN VIEW OF TEMPORARY BERM AND TEMPORARY SLOPE DRAIN

NO SCALE

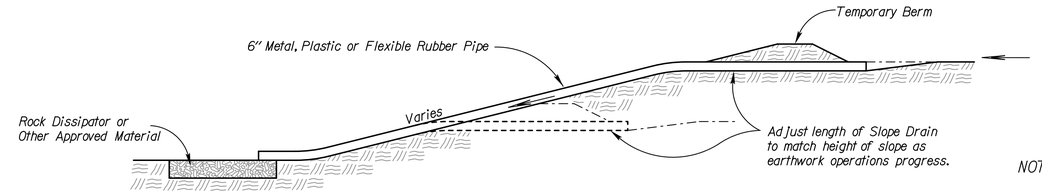

TYPICAL PROFILE OF TEMPORARY SLOPE DRAIN

NO SCALE

NOTES:

1) Temporary Slope Drain and Temporary Berm may be used on either project foreslopes or project backslopes.

2) Discharge of Slope Drains shall be into stabilized ditch or area, or into Sediment Basin.

3) Pipe shall be secured in place as approved by Engineer.

4) Temporary Berms under 2,000 feet shall be bid by Set Price.

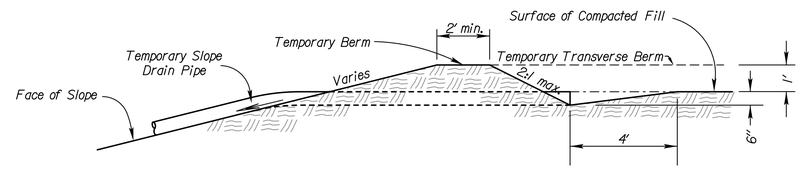

SECTION A-A

NO SCALE

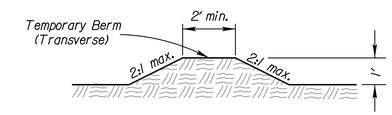

SECTION B-B

NO SCALE

TYPICAL PROFILE OF TEMPORARY BERM

NO SCALE

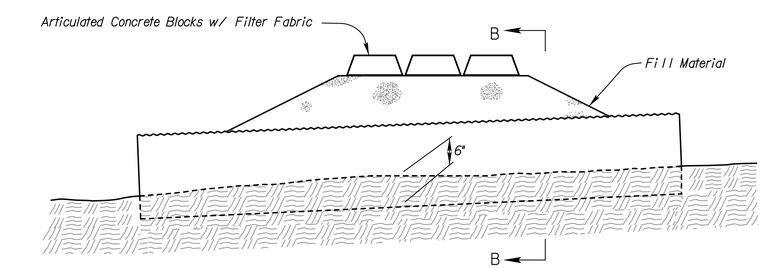

SECTION A-A

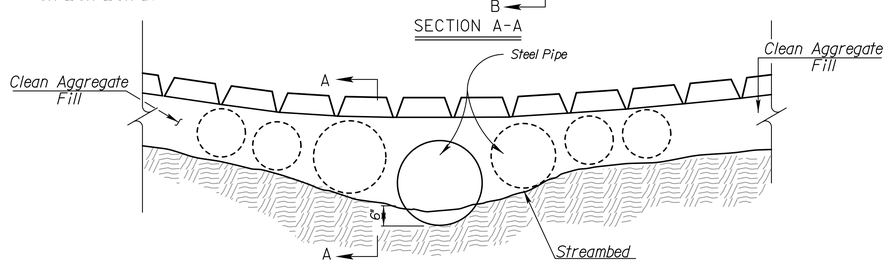

SECTION B-B

TEMPORARY STREAM CROSSING (ARTICULATED CONCRETE BLOCKS)

NO SCALE

Pipe size may vary

Place 1 pipe buried 6" into stream bottom, in the lowest point of the channel to allow the passage of aquatic organisms, with additional pipes placed along the remainder of the stream channel bottom such that ordinary high water (OHW) flows designated in the Contract Documents shall flow through the pipes without overtopping the crossing.

See KDOT Specifications for more information

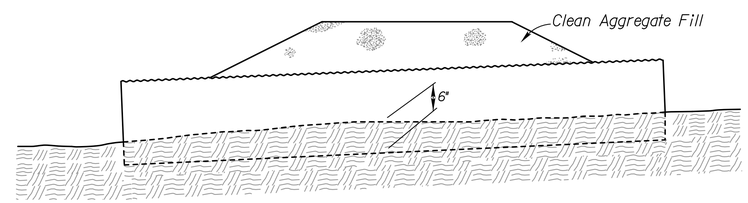

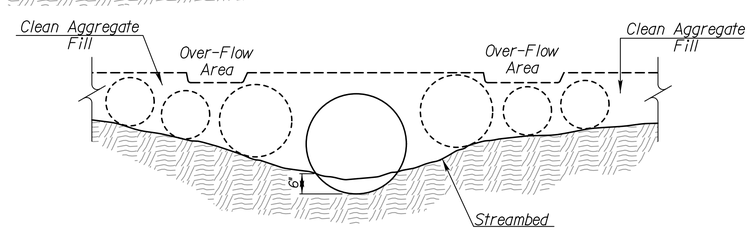

SECTION B-B

TEMPORARY STREAM CROSSING (AGGREGATE)

NO SCALE

Pipe size may vary

Place 1 pipe buried 6" into stream bottom, in the lowest point of the channel to allow the passage of aquatic organisms, with additional pipes placed along the remainder of the stream channel bottom such that ordinary high water (OHW) flows designated in the Contract Documents shall flow through the pipes without overtopping the crossing.

See KDOT Specifications for more information

NO.	DATE	REVISIONS	BY	APP'D
3	6/11/13	Revised Standard	MRM	SHS
2	11/01/10	Revised Standard	MRM	SHS
1	10/15/10	Revised Standard	WCL	RDR

KANSAS DEPARTMENT OF TRANSPORTATION

TEMPORARY EROSION AND POLLUTION CONTROL

TEMPORARY SLOPE DRAIN

TEMPORARY STREAM CROSSING (AGGREGATE)

TEMP. STREAM CROSS. (ARTC. CONC. BLOCKS)

LA852B

FHWA APPROVAL	11/08/2010	APP'D	Scott H. Shields
DESIGNED MRM	DETAILED	QUANTITIES	CADD
DESIGN CK. SHS	DETAIL CK.	QUAN.CK.	CADD CK.

Std. Base File:
Plotted By: bblizzard
Plot Location:
File: G:\12902\MicroHighways\12902R2114-ta852b.dgn
Plot Date: 7/21/2015

STATE	PROJECT NO.	YEAR	SHEET NO.	TOTAL SHEETS
KANSAS	52 C-4611-01	2015	39	64

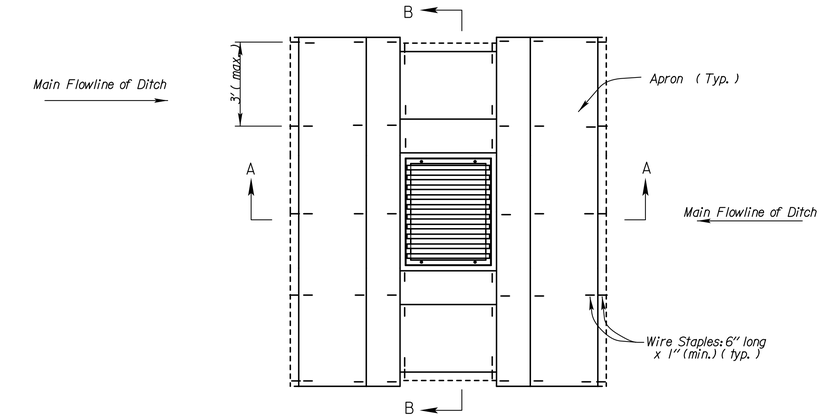

PLAN

TEMPORARY INLET SEDIMENT BARRIER
(TRIANGULAR SILT DIKE METHOD)

NO SCALE

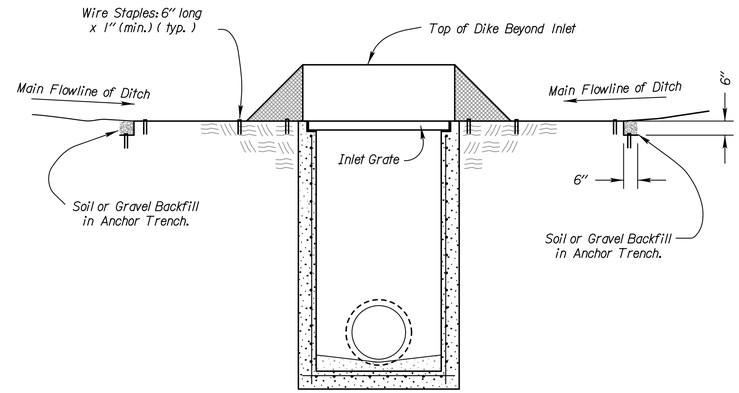

SECTION A - A

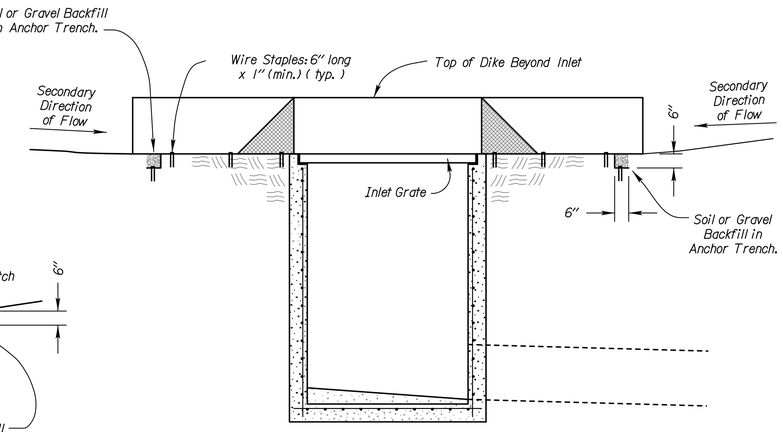

SECTION B - B

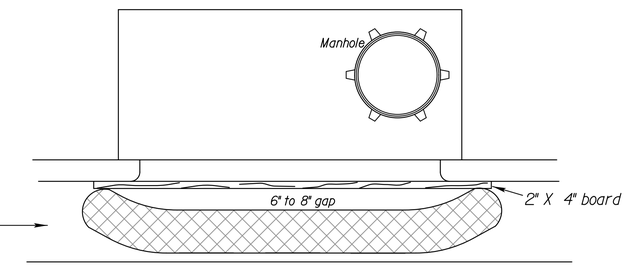

CURB INLET PROTECTION

Bags = synthetic net (3mm mesh) or burlap bags

Rock = approximately 1" to 2" diameter

1. If multiple gravel bags are required, place them in such a way that no gaps are evident.
2. Height of bags (8" minimum diameter) must not be above top of curb.
3. Alternative products may be used other than gravel bags such as the "Gutter Buddy". Products must be approved by the Engineer.
4. Curb inlet protection will be measured and paid for as Filter Sock.

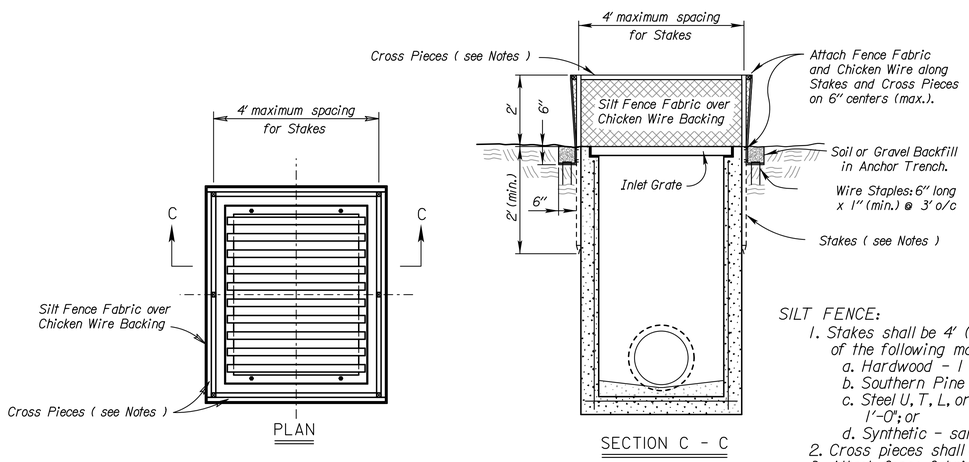

TEMPORARY INLET SEDIMENT BARRIER
(SILT FENCE METHOD)

NO SCALE

SILT FENCE:

1. Stakes shall be 4' (min.) long and of one of the following materials:
   a. Hardwood - 1 3/16" x 1 3/16";
   b. Southern Pine (No. 2) - 2 5/8" x 2 5/8";
   c. Steel U.T.L. or C Section - .95 lbs. per 1'-0"; or
   d. Synthetic - same strength as wood stakes.
2. Cross pieces shall be of same material as stakes.
3. Attach fence fabric securely on 6" centers (max).
4. Use of high flow material is acceptable.
5. Refer to plan sheets to estimate the length of silt fence required.

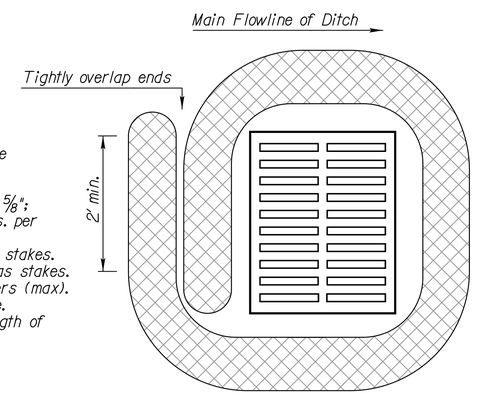

Note: 25% of log shall be keyed into ground during installation.

Stake every 4'

Drop inlet use
1'-6" TO 1'-8" diameter log

BIODEGRADABLE LOG/FILTER SOCK
DROP INLET PROTECTION

Material Requirements
Use 100% shredded mulch or other non-compost biodegradable material as fill for logs.
No compost or fines.
No hay or straw.
Do not use material which prohibits water infiltration.
Log Mesh: Use mesh with 1/4" openings or larger. Mesh must allow water infiltration but also hold fill materal in place.

NO.	DATE	REVISIONS	BY	APP'D
3	3/01/15	Revised Standard	RA	SHS
2	6/01/13	Revised Standard	MRM	SHS
1	3/01/13	Revised Standard	MRM	SHS

KANSAS DEPARTMENT OF TRANSPORTATION

TEMPORARY EROSION AND POLLUTION CONTROL

TEMP. INLET SEDIMENT BARRIER (SILT FENCE)
TEMP. INLET SEDIMENT BARRIER (T.S.D.)
CURB INLET PROTECTION
DROP INLET PROTECTION

LA852C

FHWA APPROVAL		3/10/2015	APP'D	Scott H. Shields	
DESIGNED	RA	DETAILED RA	QUANTITIES	CADD	
DESIGN CK.	SHS	DETAIL CK. SHS	QUAN.CK.	CADD CK.	

Std. Base File:
Plotted By: bblizzard
Plot Location:
File: G:\12902\MicroHighways\12902R2115-la852c.dgn
Plot Date: 7/21/2015

STATE	PROJECT NO.	YEAR	SHEET NO.	TOTAL SHEETS
KANSAS	52 C-4611-01	2015	40	64

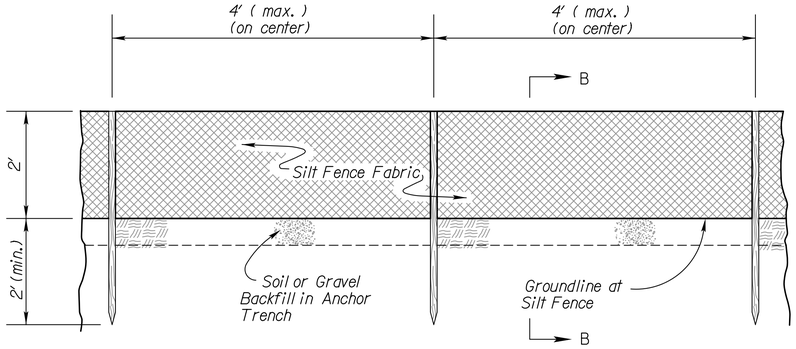

TYPICAL ELEVATION

SILT FENCE SLOPE BARRIER

NO SCALE

INSTALLATION NOTES

SILT FENCE:

1. Stakes shall be 4' (min.) long and of one of the following materials:
   a. Hardwood - 1 3/16" x 1 3/16";
   b. Southern Pine (No. 2) - 2 5/8" x 2 5/8";
   c. Steel U, T, L, or C Section - .95 lbs. per 1'-0"; or
   d. Synthetic - same strength as wood stakes.
2. Cross pieces shall be of same material as stakes.
3. Attach fence fabric securely on 6" centers (max.).
4. Use of high flow material is acceptable.
5. Refer to plan sheets to estimate the length of silt fence required.

BIODEGRADABLE LOG BARRIERS

1. Place biodegradable logs tightly together.
2. Wood stakes shall be 2" x 2" (nom.).
3. Wire staples shall be 6" long x 1" wide (min.) and placed on 4' (max.) centers.
4. Refer to plan sheets to estimate length of biodegradable log barriers required.
5. Logs should be keyed into the ground at a minimum of 25% of its height.
6. Length of stakes should be 2 times the height of the log at a minimum.

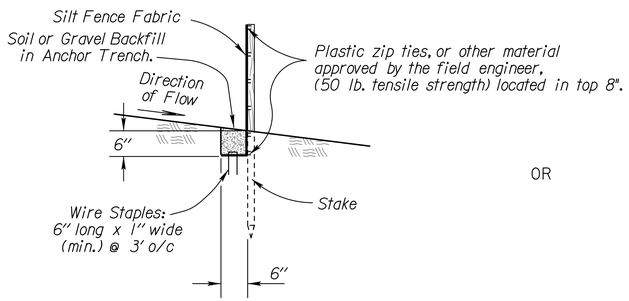

SECTION B-B

OR

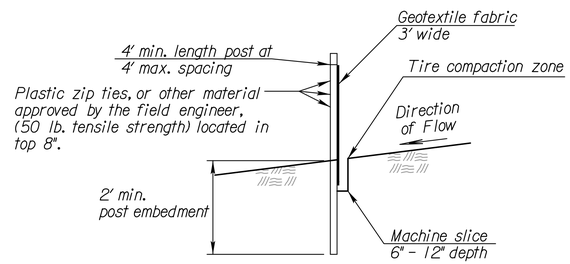

SECTION B-B

Biodegradable Logs, Straw Wattles & Sediment Logs

		PRODUCT		
		9" Sediment Log & 9" Straw Wattle (ft)	12" Sediment Log & 12" Straw Wattle (ft)	20" Sediment Log & 20" Straw Wattle (ft)
Slope Gradient	≤4H:1V	40	60	80
	3H:1V	30	45	60
	2H:1V	20	30	40
	1H:1V	10	15	20

9" and 12" material should only be used in areas which have been seeded and mulched. 20" material should be used in all other areas. Deviations should be approved by the Field Engineer.

	BIODEGRADABLE LOG MATERIAL	
	LOW FLOW	HIGH FLOW
9"	Straw/Compost	Excelsior / Wood Chips / Coconut Fiber
12"	Straw/Compost	Excelsior / Wood Chips / Coconut Fiber
18"-20"	Straw/Compost	Excelsior / Wood Chips / Coconut Fiber

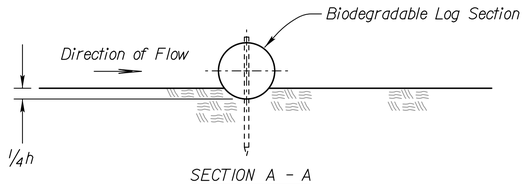

SECTION A - A

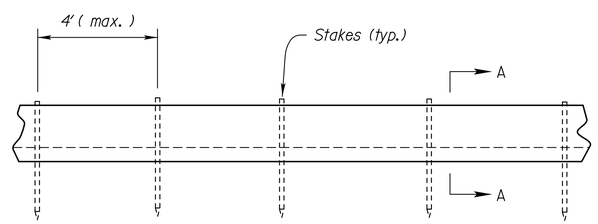

TYPICAL ELEVATION

BIODEGRADABLE LOG SLOPE BARRIER

NO SCALE

GENERAL NOTES

1) The slope barriers shall be placed along contour lines, with a short section turned upgrade at each end of the barrier. The maximum length of the slope barrier shall not exceed 250 feet, and the barrier ends need to be staggered.

2) At culverts, the Silt Fence shall be placed over the culvert, not through the streambed flowline.

3) Barriers damaged by Contractor's negligence, including improper maintenance or lack of maintenance, shall be repaired immediately by Contractor at no additional cost to KDOT.

4) Agricultural products, such as native prairie hay, used for mulching and erosion control practices, excluding wood based mulch, shall meet the North American Weed Free Forage Standards.

NO.	DATE	REVISIONS	BY	APP'D
3	3/01/15	Revised Standard	RA	SHS
2	6/01/13	Revised Standard	MRM	SHS
1	3/01/13	Revised Standard	MRM	SHS

KANSAS DEPARTMENT OF TRANSPORTATION

TEMPORARY EROSION AND POLLUTION CONTROL

SILT FENCE SLOPE BARRIERS
BIODEGRADABLE LOG SLOPE BARRIERS

LA852D

FHWA APPROVAL 3/10/2015	APP'D	Scott H. Shields	
DESIGNED RA	DETAILED RA	QUANTITIES	CADD
DESIGN CK. SHS	DETAIL CK.	QUAN.CK.	CADD CK.

Std. Base File:
Plotted By: bblizzard
Plot Location:
File: G:\V2902\Micro\Highways\V2902R2116-la852d.dgn
Plot Date: 7/21/2015

STATE	PROJECT NO.	YEAR	SHEET NO.	TOTAL SHEETS
KANSAS	52 C-4611-01	2015	41	64

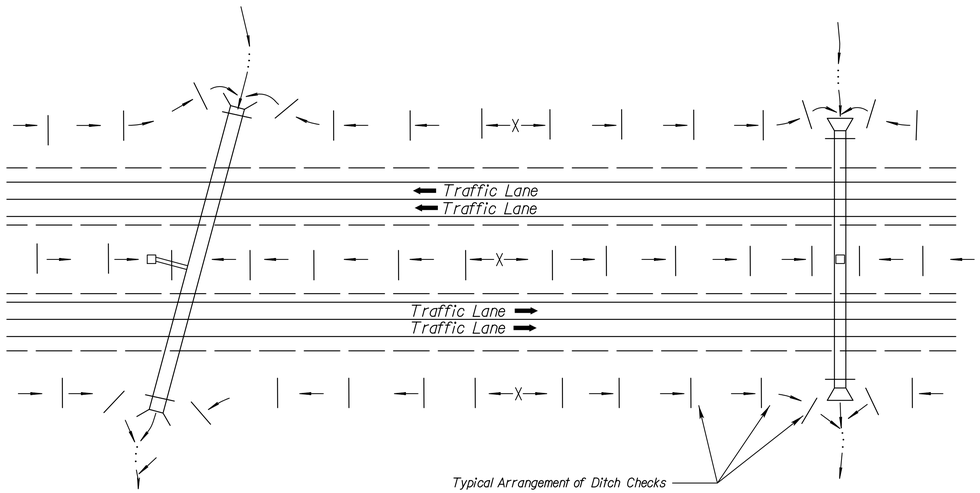

TYPICAL DITCH CHECK LAYOUT PLAN

NO SCALE

TEMPORARY DITCH CHECK SPACING	
DITCH ℄ SLOPE (%)	SPACING INTERVAL (FEET)
1.0	*200*
2.0	*100*
3.0	*65*
4.0	*50*
5.0	*40*
6.0	*33*
NOTE: Use this spacing for all except Rock Ditch Checks.	

GENERAL NOTES

1) *The choice of ditch check methods is at the option of the Contractor.*
2) *Use only rock checks in situations where the ditch slope exceeds 6 percent.*
3) *Ditch checks damaged by Contractor's negligence, including improper maintenance or lack of maintenance, shall be repaired by Contractor at no extra cost to KDOT.*

Std. Base File:	
Plotted By: bblizzard	Plot Location:
File: G:\12902\MicroStation\Highways\12902P2117-la852e.dgn	
Plot Date: 7/21/2015	

NO.	DATE	REVISIONS	BY	APP'D
3	6/01/13	Revised Standard	MRM	SHS
2	9/10/07	Revised Standard	MRM	SHS
1	6/16/05	Revised Standard	WCL	RDR

KANSAS DEPARTMENT OF TRANSPORTATION

TEMPORARY EROSION AND POLLUTION CONTROL

DITCH CHECKS

LA852E

FHWA APPROVAL		5/14/2013	APP'D	Scott H. Shields	
DESIGNED	MRM	DETAILED	MRM	QUANTITIES	CADD MRM
DESIGN CK.	SHS	DETAIL CK.	SHS	QUAN.CK.	CADD CK. SHS

STATE	PROJECT NO.	YEAR	SHEET NO.	TOTAL SHEETS
KANSAS	52 C-4611-01	2015	42	64

SILT FENCE:

1. Stakes shall be 4' (min.) long and one of the following materials:
   a. Hardwood - 1 3/16" x 1 3/16";
   b. Southern Pine (No. 2) - 2 5/8" x 2 5/8";
   c. Steel U, T, L, or C Section - .95 lbs. per 1'-0";
   d. Synthetic - same strength as wood stakes.
2. Cross pieces shall be of same material as stakes.
3. Attach fence fabric securely on 6" centers (max.).
4. Use of high flow material is acceptable.
5. Refer to plan sheets to estimate the length of silt fence required.
6. Use support fencing when tributary area is greater than 2.4 acres or when ditch gradient is greater than 2 percent.
7. Silt fence plowing is acceptable at a 6" minimum depth. Trenching is acceptable in certain cases.

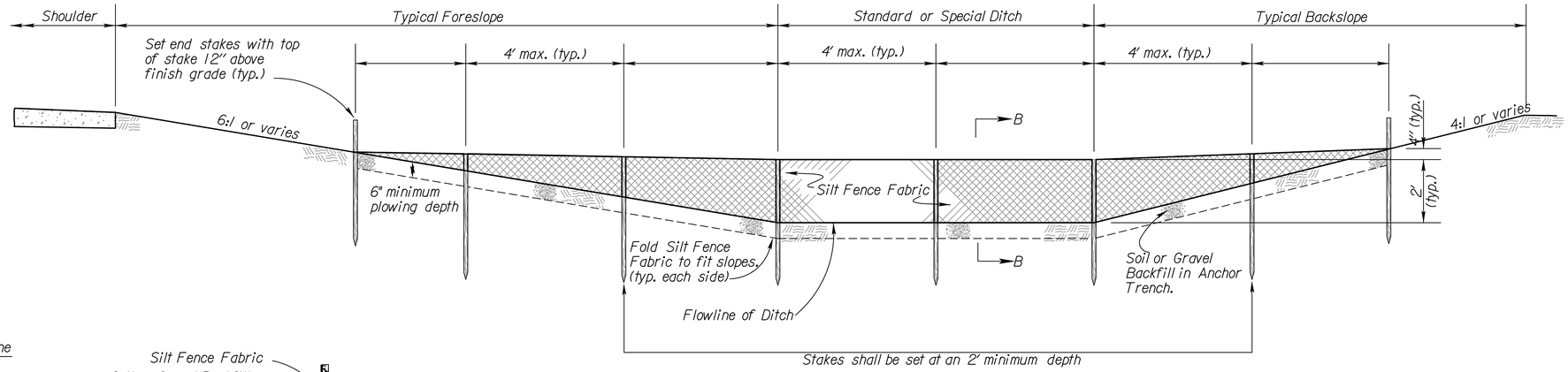

TYPICAL ELEVATION

SILT FENCE DITCH CHECK

NO SCALE

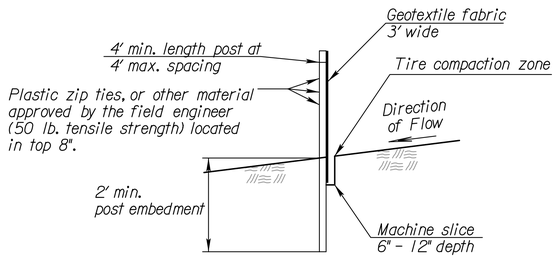

SILT FENCE INSTALLATION

SECTION B-B

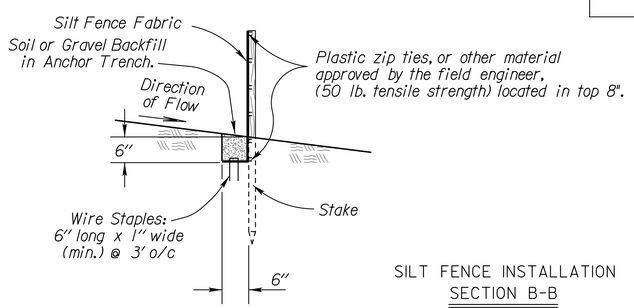

SILT FENCE INSTALLATION

SECTION B-B

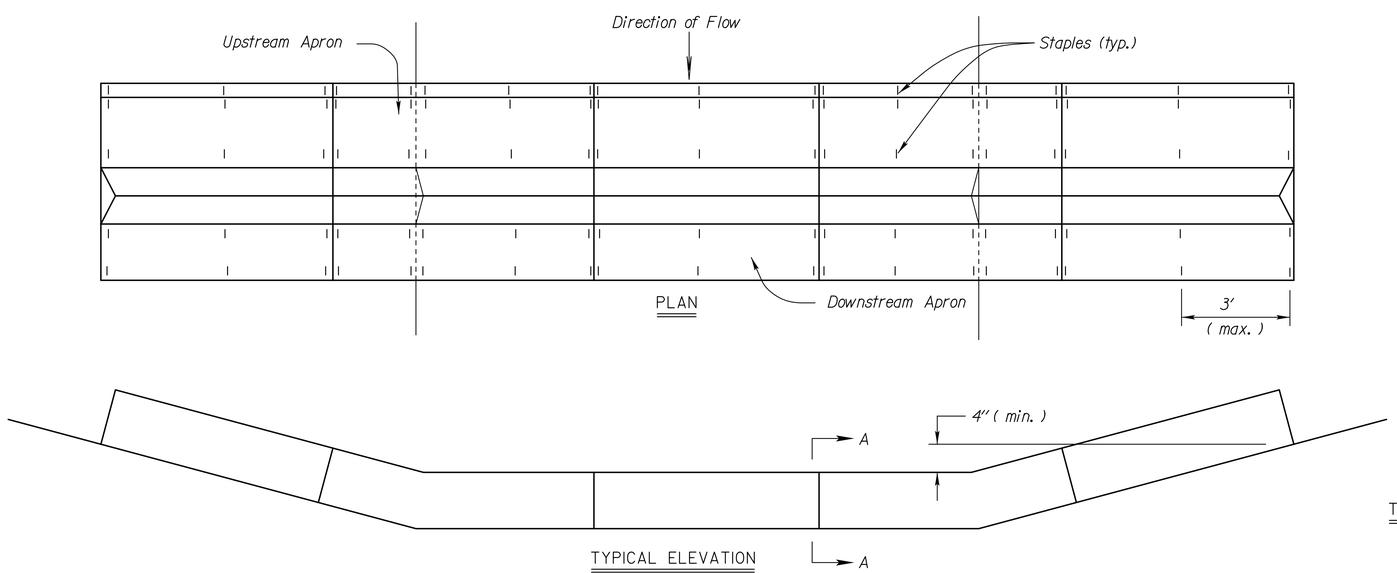

PLAN

TYPICAL ELEVATION

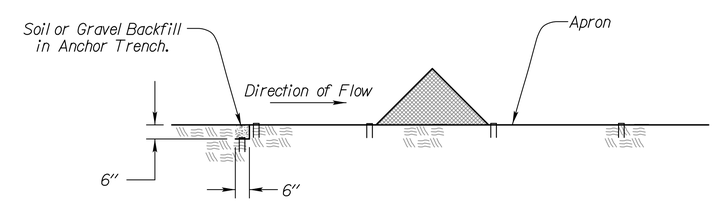

SECTION A - A

TRIANGULAR SILT DIKE:

1. Place triangular silt dike sections tightly together with apron material overlapping end-to-end by 6".
2. Wire staples shall be 6" long by 1" wide (min).
3. Use as many triangular silt dike sections as necessary to ensure water does not flow around end of ditch check.

TRIANGULAR SILT DIKE DITCH CHECK

NO SCALE

NO.	DATE	REVISIONS	BY	APP'D
3	3/01/15	Revised Standard	RA	SHS
2	7/24/13	Revised Standard	MRM	SHS
1	6/01/13	Revised Standard	MRM	SHS

KANSAS DEPARTMENT OF TRANSPORTATION

TEMPORARY EROSION AND POLLUTION CONTROL

SILT FENCE DITCH CHECKS

TRIANGULAR SILT DIKE DITCH CHECKS

LA852F

FHWA APPROVAL		3/10/2015	APP'D		Scott H. Shields
DESIGNED	RA	DETAILED	RA	QUANTITIES	CADD
DESIGN CK.	SHS	DETAIL CK.	SHS	QUAN.CK.	CADD CK.

Std. Base File:
Plotted By: bblizzard
Plot Location:
File: G:\12902\MicroStation\Highways\12902R2118-la852f.dgn
Plot Date: 7/21/2015

STATE	PROJECT NO.	YEAR	SHEET NO.	TOTAL SHEETS
KANSAS	52 C-4611-01	2015	43	64

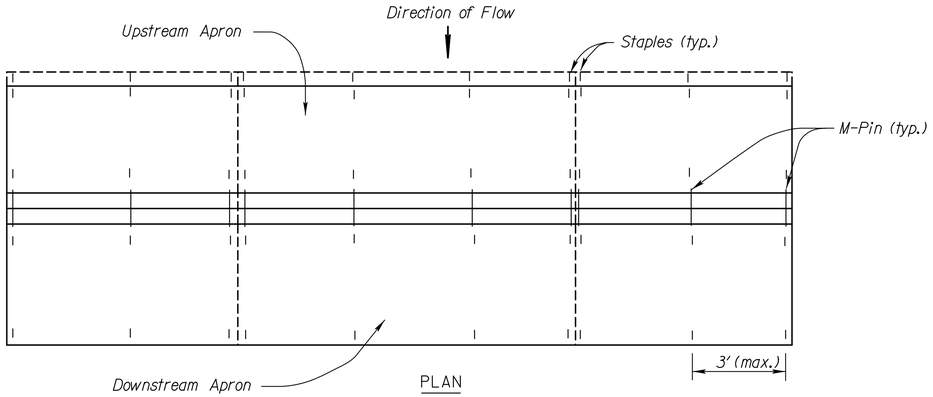

PLAN

GEO-RIDGE PERMEABLE BERM NOTES

1. Overlap Geo-ridge Berm sections and apron material by 6".
2. Use M-Pins supplied by manufacturer to secure geo-ridge Berm sections.
3. Use as many Geo-ridge Berm sections as necessary to insure water does not flow around end of ditch check.
4. Use silt fence material as the apron to prevent scour above and below the ditch check.
5. Wire Staples shall be 6" long by 1" wide, minimum.

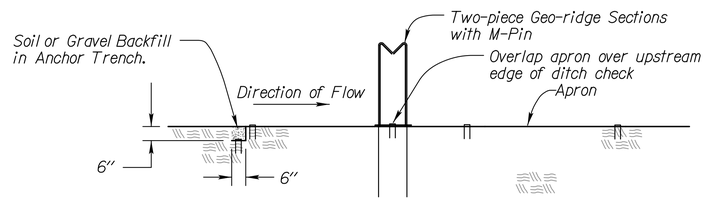

SECTION C - C

ROCK DITCH CHECK NOTES

1. Rock shall be clean aggregate, D50 = 6".
2. Place rock in such manner that water will flow over, not around ditch check.
3. Do not use rock ditch checks in clear zone.
4. Excavation: The ditch area shall be reshaped to fill any eroded areas. Prior to placement of the rock, the ditch shall be excavated to the dimensions of the Rock Ditch Check and to a minimum depth of 6" (150mm). After placement of the rock, backfill and compact any over excavated soil to ditch grade. This work shall be subsidiary to the bid item Temporary Ditch Check (Rock) (Set Price).
5. Aggregate excavated on site may be used as an alternate to the 6" rock, if approved by the Engineer.
6. The Engineer may approve the use of larger aggregates when conditions warrant their use.

TEMPORARY ROCK DITCH CHECK SPACING	
DITCH ℄ SLOPE (%)	SPACING INTERVAL (FEET)
5.0	60
6.0	50
7.0	43
8.0	36
9.0	33
10.0	29
NOTE: Use this spacing only for Rock Ditch Checks.	

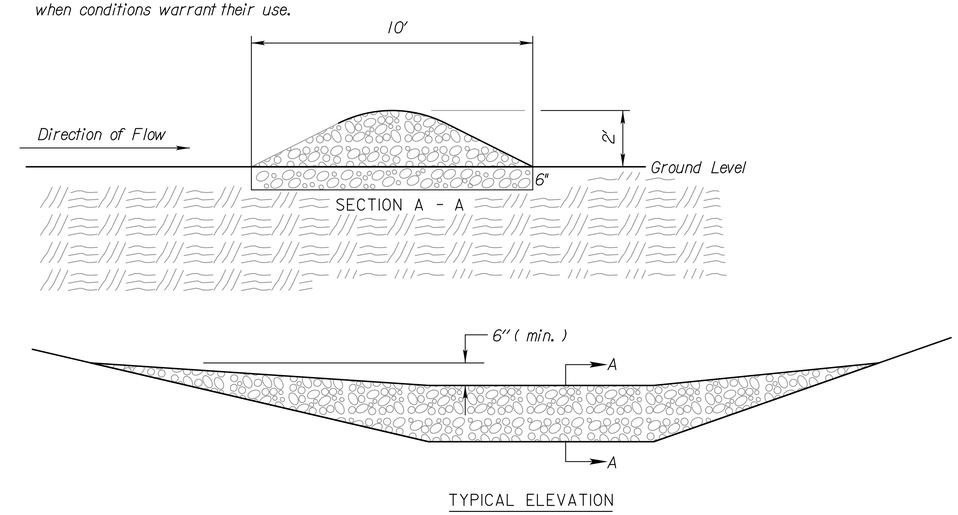

TYPICAL ELEVATION

ROCK DITCH CHECK

NO SCALE

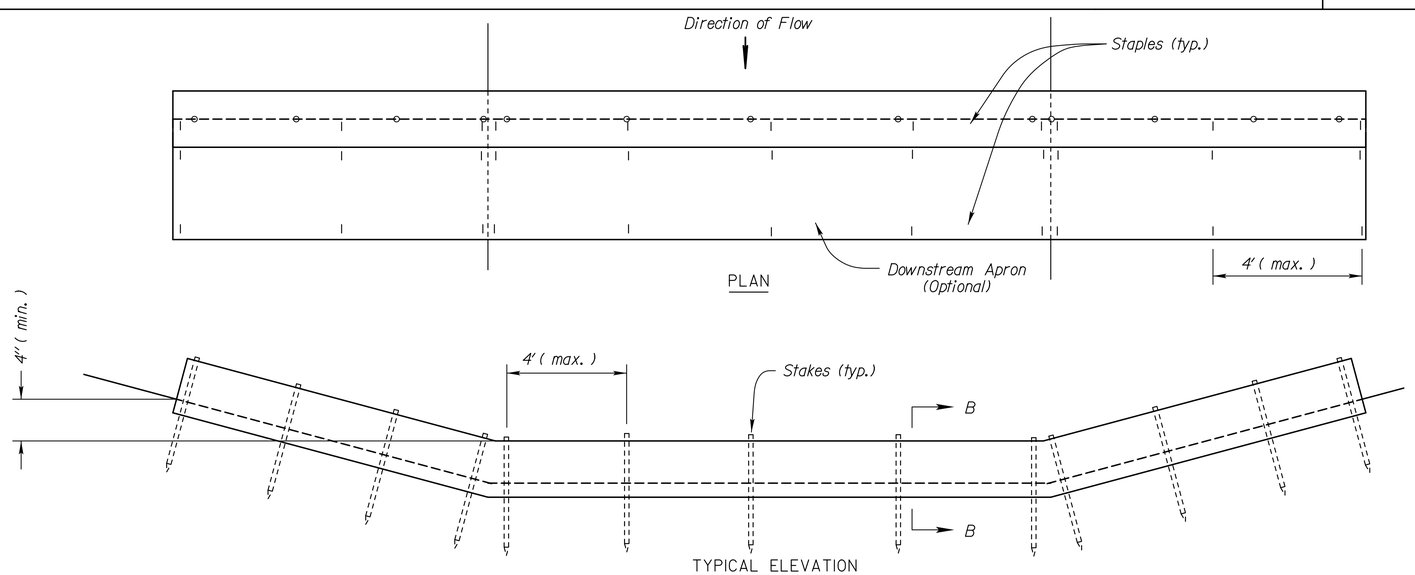

PLAN

TYPICAL ELEVATION

BIODEGRADABLE LOG DIKE NOTES

1. Use as many biodegradable log sections as necessary to ensure water does not flow around end of ditch check.

2. Overlap sections a minimum of 18"

3. Stakes shall be wood or steel according to section 2114 of the standard specifications. Length of stakes shall be a minimum of 2 x the diameter of the log.

4. Use Erosion Control (class 1) (type C) as the downstream apron when required.

5. Use 9" diameter logs when used with Erosion Control (class 2) (any type) channel lining.

6. A downstream apron is required when directed by the Engineer. Apron material will be paid at the contract unit price

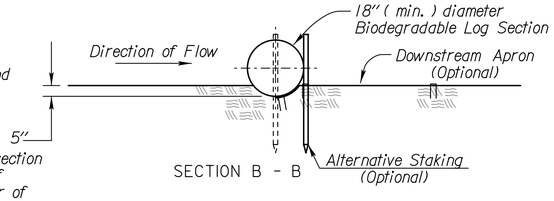

SECTION B - B

BIODEGRADABLE LOG DITCH CHECK

OR Filter Sock Ditch Check

NO SCALE

NO.	DATE	REVISIONS	BY	APP'D
3	9/15/14	Revised Standard	RAA	SHS
2	9/01/10	Revised Standard	MRM	SHS
1	12/31/09	Revised Standard	MRM	SHS

KANSAS DEPARTMENT OF TRANSPORTATION

TEMPORARY EROSION AND POLLUTION CONTROL

ROCK DITCH CHECKS

BIODEGRADABLE LOG DITCH CHECKS

GEO-RIDGE PERMEABLE BERM DITCH CHECKS

LA852G

FHWA APPROVAL		9/15/2014	APP'D	Scott H. Shields	
DESIGNED	MRM	DETAILED	RAA	QUANTITIES	CADD RAA
DESIGN CK.	SHS	DETAIL CK.	SHS	QUAN.CK.	CADD CK.

Std. Base File: la852g.dgn
Plotted By: bblizzard
Plot Location:
File: G:\V2902\Micro\Highways\V2902R2119-la852g.dgn
Plot Date: 7/21/2015

STATE	PROJECT NO.	YEAR	SHEET NO.	TOTAL SHEETS
KANSAS	52 C-4611-01	2015	44	64

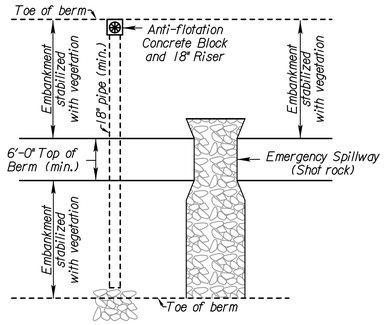

SEDIMENT STORAGE BASIN (PLAN)

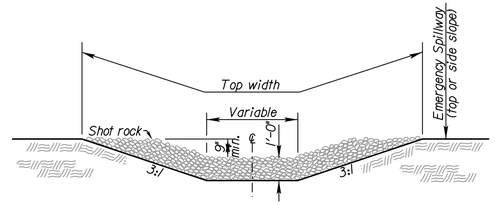

CROSS SECTION (EMERGENCY SPILLWAY)

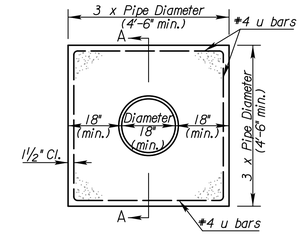

CONCRETE ANTI-SEEP COLLAR

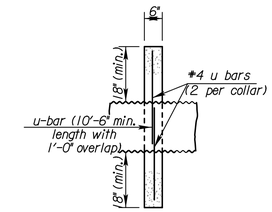

SECTION A-A

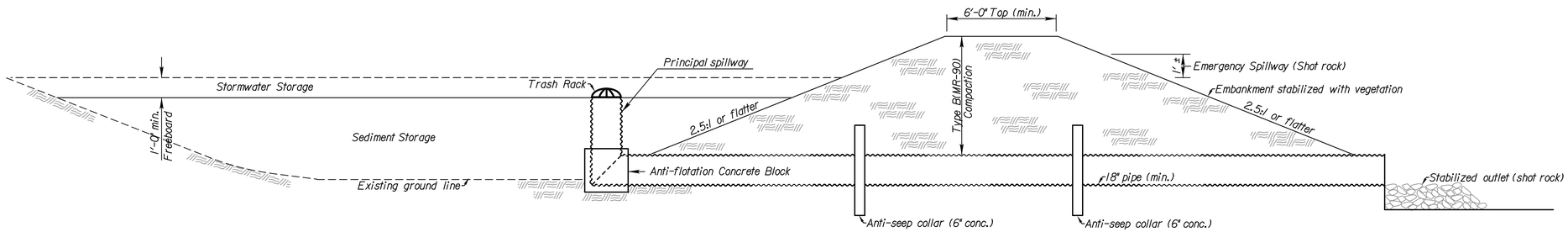

SEDIMENT STORAGE BASIN (ELEVATION)

NOTES:

1) Temporary Sediment Basins shall be constructed at locations as directed by the Engineer or as approved in the SWPPP Schedule. All work and materials necessary, including but not limited to, the fill material, compaction, drainage pipes, aggregates and all other incidentals necessary to construct the basin, shall be paid as "Temporary Sediment Basin".

2) Lengths and top dimensions shall be determined in the field by the Engineer.

3) Skimmer dewatering device required and must be used reguardless the size of the drainage area.

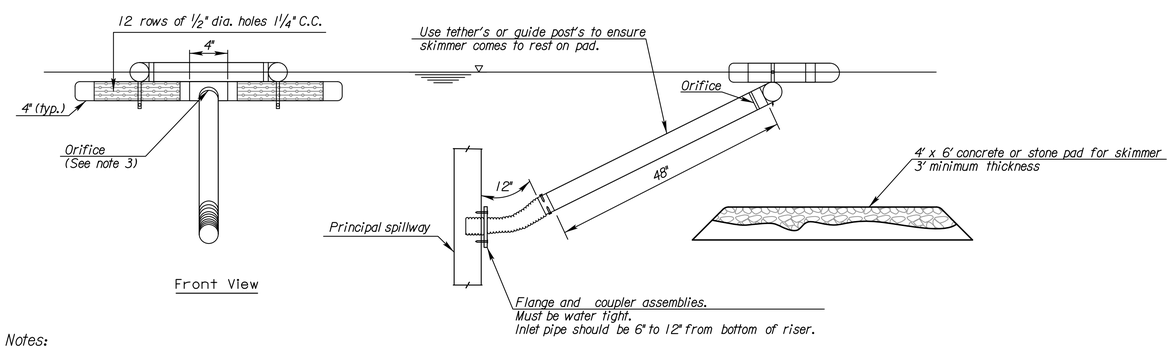

Front View

Side View

Notes:

1. All P.V.C. pipes are to be schedule 40.
2. HDPE flexible drain pipes is to be attached to the pond outlet structure with water-tight connections.
3. The orifice shall be sized of to provide drawdown time to 2 to 5 days and approved by the engineer.
4. Other skimmer designs maybe used that dewaters from the surface at a controlled rate. The design must be approved by the engineer.

SKIMMER DEWATERING DEVICE

SEDIMENT STORAGE BASIN LOCATIONS

STATION TO STATION	SIDE	REQUIRED STORAGE CAPACITY

NO.	DATE	REVISIONS	BY	APP'D
3				
2	9/3/13	Added Skimmer Dewatering Device	MRM	SHS
1	7/17/13	Revised Standard	MRM	SHS

KANSAS DEPARTMENT OF TRANSPORTATION

TEMPORARY EROSION AND POLLUTION CONTROL

SEDIMENT STORAGE BASIN

LA852H

FHWA APPROVAL		09/24/2013	APP'D	Scott H. Shields	
DESIGNED	BB	DETAILED	BB	QUANTITIES	CADD BB
DESIGN CK.	SHS	DETAIL CK.	SHS	QUAN.CK.	CADD CK. SHS

Std. Base File:
Plotted By: bblizzard
Plot Location:
File: G:\2902\Micro\Highways\2902R2120-la852h.dgn
Plot Date: 7/21/2015

STATE	PROJECT NO.	YEAR	SHEET NO.	TOTAL SHEETS
KANSAS	52 C-4611-01	2015	45	64

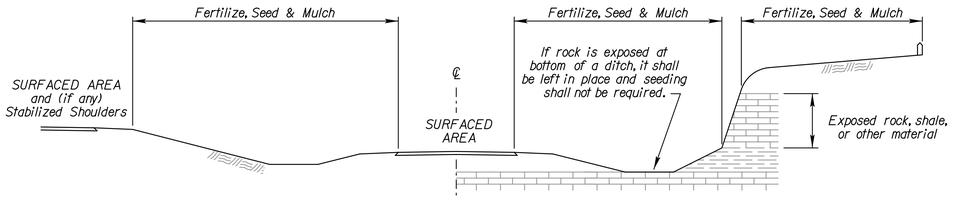

CUT SECTION

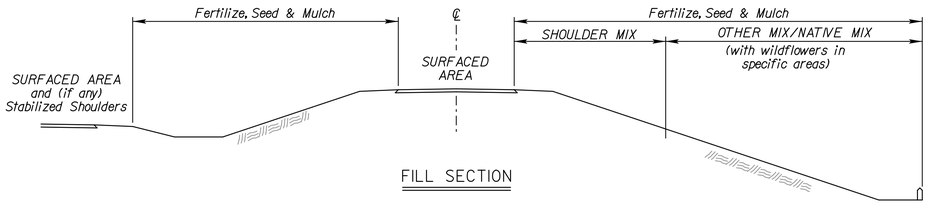

FILL SECTION

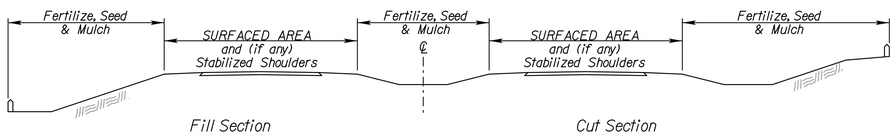

Fill Section Cut Section

TYPICAL SECTION - DUAL PAVEMENT

SEEDING PERIODS

COOL SEASON	WARM SEASON
February 15 to April 20 and August 15 to Sept. 30	November 15 to June 1
SPECIES	SPECIES
Bluegrasses	Big Bluestem
Bromegrasses	Blue Grama
Canada Wildrye	Buffalograss
Fescues	Eastern Gamagrass
Prairie Junegrass	Indiangrass
Reed Canarygrass	Little Bluestem
Ryegrasses	Sand Bluestem
Sterile Wheatgrass	Sand Dropseed
Tall Dropseed	Sand Lovegrass
Western Wheatgrass	Side Oats Grama
	Switchgrass
	Wildflower Mixes

When "Cool Season" species are mixed with "Warm Season" species, in areas of 1 acre or more, the mixture shall be seeded during the "Warm Season". In areas of less than 1 acre, the mixture of "Cool Season" and "Warm Season" species may be seeded during the "Warm or Cool Seasons".

SODDING PERIODS
March 1 to April 15 and September 1 to November 15

GENERAL NOTES

The entire disturbed area, excepting the paved or surfaced areas, steep rocky slopes and areas of undisturbed native sod or other desirable vegetation shall be fertilized (limed when required), seeded, and mulched. Soil preparation shall conform to the Standard Specifications except as noted below.

All borrow areas shown on the plans are to be fertilized, seeded, and mulched. However, operation in borrow areas where crops are growing may be omitted when requested by the owner.

It shall not be required to till the area to bare ground prior to permanent seeding. If temporary cover has provided stable slopes with no erosion, seed the permanent grasses into the existing cover. If there has been erosion that requires repair prior to seeding, then it may be necessary to regrade the area, resulting in bare ground.

FERTILIZER: A ratio and application rate that equals or exceeds the required minimum rate per acre of N, P_2O_5, K_2O listed in Summary of Seeding Quantities will be acceptable.

MULCHING: Mulch shall be spread uniformly over all disturbed areas and punched in the soil, unless otherwise noted on the plans. The rate of application per acre, thickness in place, for the mulching material is as follows:

1¾ - 2¼ Tons per Acre = 1½" loose depth spread uniformly over acre.

Agricultural products, such as native prairie hay, used for mulching and erosion control practices, excluding wood based mulch, shall meet the North American Weed Free Forage Standards.

Other vegetative mulches are acceptable only with the Engineer's concurrence.

The above rate is a guide. It will be at the discretion of the Engineer to determine what rate is sufficient for adequate protection of newly seeded areas.

The amount of mulch in the quantities is estimated. The total mulch required shall be determined in the field. The bid item for mulching shall be paid for according to Standard Specification Section 904.

NATIVE WILDFLOWER MIX 1

PLS RATE	NAME	QTY (lb)
0.1	Black Eyed Susan	
1.8	Illinois Bundleflower	
0.15	Maximilian Sunflower	
0.4	Purple Prairie Clover	
2.9	Showy Partridge Pea	
0.1	Upright Prairie Coneflower	
0.3	Butterfly Milkweed	
0.1	Stiff Goldenrod	
0.05	Pinnate Prairie Coneflower	
0.1	Lance-leaf Coreopsis	
0.05	New England Aster	
0.2	Pale Purple Coneflower	
0.05	Plains Coreopsis	
0.05	Hoary Verbena	
0.3	Roundhead Lespedeza	
0.4	Thickspike Gayfeather	
0.05	Wild Bergamot	
0.2	Smooth Oxeye	
0.05	Lemon Mint	
7.35	Total (lb)	

NATIVE WILDFLOWER MIX 2

PLS RATE	NAME	QTY (lb)
0.1	Black Eyed Susan	
1.8	Illinois Bundleflower	
0.15	Maximilian Sunflower	
0.4	Purple Prairie Clover	
2.9	Showy Partridge Pea	
0.1	Upright Prairie Coneflower	
0.3	Butterfly Milkweed	
0.4	Dotted Blazing Star	
0.4	Annual Gaillardia	
0.05	Stiff Goldenrod	
0.05	New England Aster	
0.3	Missouri Evening Primrose	
0.05	Plains Coreopsis	
0.15	White Prairie Clover	
0.3	Roundhead Lespedeza	
0.05	Lemon Mint	
0.15	Pitcher Sage	
7.65	Total (lb)	

NATIVE WILDFLOWER MIX 3

PLS RATE	NAME	QTY (lb)
0.15	Black Eyed Susan	
1.9	Illinois Bundleflower	
0.15	Maximilian Sunflower	
0.05	Western Yarrow	
0.5	Black Sampson Echinacea	
0.05	Upright Prairie Coneflower	
0.3	Butterfly Milkweed	
0.4	Dotted Blazing Star	
0.75	Annual Gaillardia	
0.05	Stiff Goldenrod	
0.05	New England Aster	
0.4	Pitcher Sage	
0.01	Plains Coreopsis	
0.15	White Prairie Clover	
0.2	Purple Prairie Clover	
0.4	Leadplant	
0.02	White Heath Aster	
1	Blue Wild Indigo	
0.05	Lemon Mint	
6.58	Total (lb)	

NATIVE WILDFLOWER MIX 4

PLS RATE	NAME	QTY (lb)
1.9	Illinois Bundleflower	
0.4	Maximilian Sunflower	
0.05	Western Yarrow	
1	Black Sampson Echinacea	
0.1	Upright Prairie Coneflower	
0.1	Scarlet Globemallow	
0.4	Dotted Blazing Star	
1.1	Annual Gaillardia (Firewheel)	
0.1	Hoary Vervain	
0.3	White Prairie Clover	
0.4	Purple Prairie Clover	
0.4	Perennial Gaillardia (Blanket Flower)	
0.02	White Heath Aster	
0.05	Lemon Mint	
6.32	Total (lb)	

Package and deliver the wildflower seed separately from the grass seed mix. Package and deliver the Tall Drop Seed separately from the grass seed and the wildflower mix. Place the grass seed (except Tall Drop Seed) in the large seed box and drill (cover) seed 1/8" - 1/4". Place the wildflower seed in a separate seed box and drill (cover) seed 1/16" maximum. Place the Tall Drop Seed in a separate (third) seed box and place the seed (using the seed drill) on the soil surface.
OPTION: Broadcast Tall Drop Seed on the soil surface.

SUMMARY OF SEEDING QUANTITIES

P.L.S. RATE/ACRE				ACRES				BID ITEM	QUANTITY	UNIT
SHLDR	OTHER			SHLDR	OTHER					
200				0.60				Fertilizer (13-13-13)		
	80							Fertilizer (15-30-15)		
	2							Seed (Big Bluestem Grass) (Kaw)		
0.5				0.60				Seed (Blue Grama Grass) (Lovington)		
4.5				0.60				Seed (Buffalograss) (Treated)		
	10							Seed (Canada Wild-rye)		
	2							Seed (Indiangrass Seed) (Osage)		
	2							Seed (Little Bluestem Grass) (Aldous)		
45				0.60				Seed (Ryegrass) (Perennial)		
2.6				0.60				Seed (Prairie June Grass)		
6.3	6.3			0.60				Seed (Side Oats Grama) (El Reno)		
	10							Seed (Sterile Wheatgrass)		
	0.7							Seed (Switchgrass) (Blackwell)		
	0.5							Seed (Tall Drop)		
45				0.60				Seed (Fesue) (Tall) (Endophyte-Free)		
6	4			0.60				Seed (Western Wheatgrass) (Barton)		
	7.35							Seed (Native Wildflower Mix 1)		
								Mulching (Permanent) (Set Price)	1	TON

SHLDR = Shoulder Turf Mix: Includes a 30 foot wide strip along the stabilized shoulder on each side of each traveled way, plus all median areas less than 60 feet wide.

OTHER = All other turf areas except Shoulder, Guardrail, and Native areas usually include the Native Wildflower Mix.

NOTE: Projects of less than 1 acre shall be bid as "Seeding" by the lump sum. All disturbed areas shall be seeded, fertilized and mulched at the listed rate per acre. The acres are estimated.

Project will be bid as "Seeding" by the lump sum. All disturbed areas shall be seeded, fertilized and mulched at the listed rate per acre. The acres are estimated.

NO.	DATE	REVISIONS	BY	APP'D
4	6/01/13	Revised Standard	MRM	SHS
3	3/01/13	Revised Standard	MRM	SHS
2	2/24/12	Revised Standard	MRM	SHS
1	6/01/10	Revised Standard	MRM	SHS

KANSAS DEPARTMENT OF TRANSPORTATION

PERMANENT SEEDING
SUMMARY OF SEEDING QUANTITIES

LA850

FHWA APPROVAL	5/14/2013	APP'D	Scott H. Shields
DESIGNED MRM	DETAILED MRM	QUANTITIES	CADD
DESIGN CK.	DETAIL CK.	QUAN.CK.	CADD CK.

Std. Base File:
Plotted By: bblizzard Plot Location:
File: G:\12902\MicroHighways\12902R2\21-la850.dgn
Plot Date: 7/21/2015

STATE	PROJECT NO.	YEAR	SHEET NO.	TOTAL SHEETS
KANSAS	52 C-4611-01	2015	46	64

SYMBOL KEY

- REMOVE SIGN
- REMOVE POST
- REMOVE FOOTING
- REMOVE SIGN & POST
- REMOVE POST & FOOTING
- REMOVE SIGN, POST, & FOOTING
- MOUNT ON WOOD POST IN CONCRETE FOOTING
- MOUNT ON WOOD POST IN SOIL
- MOUNT ON STEEL BEAM BREAKAWAY POST
- MOUNT ON STEEL U-POST
- MOUNT ON PSST POST
- MOUNT ON PSST POST WITH COUPLER
- MOUNT ON PSST POST WITH COUPLER AND FOOTING
- MOUNT ON EXISTING POST
- MOUNT ON VERTICAL SUPPORT
- SHOULDER MOUNTED INSTALLATION
- OFFSET MOUNTED INSTALLATION
- EXISTING SIGN
- EXISTING SIGN TO BE OVERLAID
- SIGN IS NOT PART OF PROJECT
- TYPE 'A' DELINEATOR (RIGID)
- TYPE 'B' DELINEATOR (RIGID)
- TYPE 'A' DELINEATOR (FLEXIBLE)
- TYPE 'B' DELINEATOR (FLEXIBLE)
- TYPE 2 OBJECT MARKER
- TYPE 3 OBJECT MARKER

GENERAL NOTES

IN ORDER TO EXPEDITE THE COMPLETION OF THE PROJECT FOR TRAFFIC SERVICE, THE SIGNING AND DELINEATOR WORK SHALL BE SEQUENCED WITH ANY OTHER CONTRACT WORK SUCH THAT THE PHASES OF CONSTRUCTION MAY PROCEED AND BE COMPLETED AT THE SAME TIME.

NEW SIGNS ERECTED ON THE PROJECT WHICH ARE IN CONFLICT WITH EXISTING SIGNING ARE TO BE COMPLETELY COVERED UNTIL THE EXISTING SIGNS ARE REMOVED OR THE NEW SIGNING IS APPLICABLE. THE EXISTING SIGNS THAT ARE BEING REPLACED, REMOVED, OR DO NOT FOLLOW THE CURRENT MUTCD SIGNING STANDARDS ARE TO BE REMOVED WHEN THE PROJECT IS COMPLETED OR AS DETERMINED BY THE ENGINEER.

THE CONTRACTOR SHALL EXERCISE CAUTION AT ALL TIMES WHEN INSTALLING SIGN SUPPORTS IN AND AROUND AREAS WHERE UTILITIES EXIST, EITHER UNDERGROUND OR OVERHEAD, AND WILL BE HELD RESPONSIBLE FOR ANY DAMAGE INCURRED TO THE SYSTEM. THE INSTALLATION OF SIGN SUPPORTS SHALL INCLUDE THE EXCAVATION, DRILLING, OR DRIVING THE SUPPORT FOOTING AND THE ERECTION OF THE SIGN SUPPORT. THE CONTRACTOR SHALL EXERCISE CAUTION WHEN WORKING AROUND ANY EXISTING SIGNS THAT ARE TO REMAIN AND WILL BE HELD RESPONSIBLE FOR ANY DAMAGE TO THE SIGNS, SUPPORTS, OR FOOTINGS. THE CONTRACTOR SHALL EXERCISE CARE WHEN WORKING AROUND SHRUBBERY WHILE REMOVING OR INSTALLING SIGNS OR SIGN SUPPORTS.

AN EXISTING SIGN POST INSTALLATION SHALL BE PLUMB AND THE COMPACTION OF THE BACKFILL SOIL SHALL COMPLY WITH THE SPECIFICATIONS AFTER THE REMOVAL AND RESETTING OF A SIGN, THE REMOVAL AND REPLACEMENT OF A SIGN, OR THE INSTALLATION OF A NEW SIGN.

THE CONTRACTOR SHALL PROVIDE MOUNTING BOLTS THAT ARE OF A LENGTH THAT DOES NOT EXTEND MORE THAN A NOMINAL 1 INCH BEYOND THE SIGN POST. THE CONTRACTOR SHALL NOT MAKE ANY FIELD MODIFICATIONS TO THE MOUNTING BOLT PRIOR TO OR AFTER THE SIGN IS INSTALLED.

SPECIFIC SERVICE, LOGO, SIGNS THAT ARE TO BE REMOVED SHALL HAVE THE BUSINESS LOGO PLAQUES REMOVED AND TRANSPORTED TO LOCATION DETERMINED BY KDOT, AT WHICH TIME THE PLAQUES BECOME THE PROPERTY OF KDOT. THE CONTRACTOR WILL BE ASSESSED A REPLACEMENT COST FOR ANY DAMAGE TO A BUSINESS LOGO PLAQUE PRIOR TO THE PLAQUE BECOMING THE PROPERTY OF KDOT.

THE MATERIALS AND FABRICATION FOR SIGNING AND DELINEATION WORK SHALL CONFORM TO THE STANDARD SPECIFICATIONS FOR STATE ROAD AND BRIDGE CONSTRUCTION (2007 EDITION) AND SPECIAL PROVISIONS.

INDEX OF SHEETS

46 SIGNING INDEX, SYMBOLS, & GENERAL NOTES
47 POSITIONING OF DELINEATORS AND OBJECT MARKERS (TYPE 2& 3)
48 DESIGN & MOUNTING DETAILS FOR OBJECT MARKERS (TYPE 2 & 3)
49 PLAN SHEETS (INSTALLATIONS & REMOVALS)
50 SUMMARY SHEET (INSTALLATIONS & REMOVALS)
51 RECAPITULATION SHEET
52 DETAILS FOR FLAT SHEET SIGN BLANKS

NO.	DATE	REVISIONS	BY	APP'D
1	7/23/10	Changed General Notes and Spec Book Date	D.D.G.	D.B.

KANSAS DEPARTMENT OF TRANSPORTATION

SIGNING SYMBOL KEY
GENERAL NOTES
AND INDEX

TE402 7/1/03

FHWA APPROVAL			7/23/2010	APP'D	Steven A. Buckley		
DESIGNED	D.D.G.	DETAILED	W.S.B.	QUANTITIES		TRACED	
DESIGN CK.	S.A.B.	DETAIL CK.	D.D.G.	QUAN. CK.		TRACE CK.	

Plotted : 21-JUL-2015 13:38
Drawn By : bblizzard
File : TE402.dgn

STATE	PROJECT NO.	YEAR	SHEET NO.	TOTAL SHEETS
KANSAS	52 C-4611-01	2015	47	64

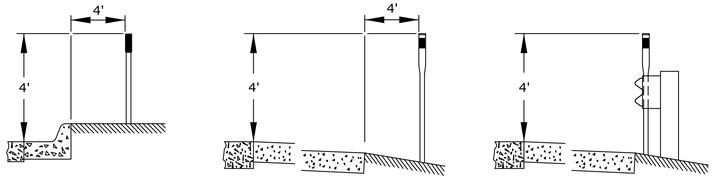

CURB SECTION SHOULDER SECTION GUARD FENCE SECTION

TYPICAL DELINEATOR LOCATION FOR ROADSIDE MOUNTING

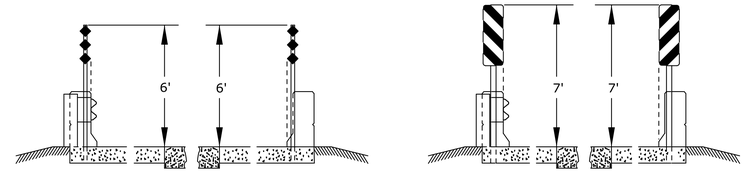

TYPE 2 OBJECT MARKERS
SHOULDER WIDTH 6 FT OR GREATER

TYPE 3 OBJECT MARKERS
SHOULDER WIDTH LESS THAN 6 FT

TYPICAL OBJECT MARKER LOCATION FOR BRIDGE AND CULVERT STRUCTURES

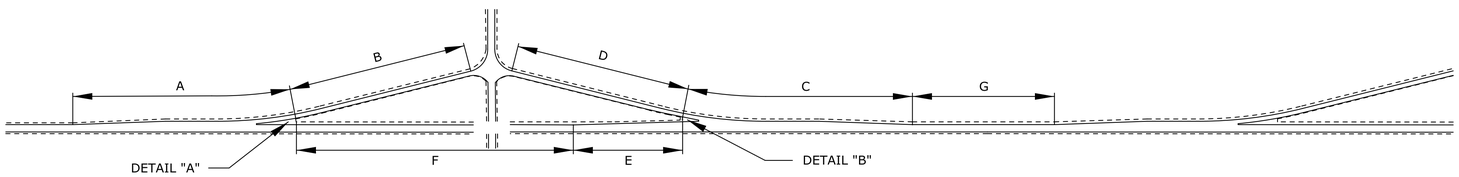

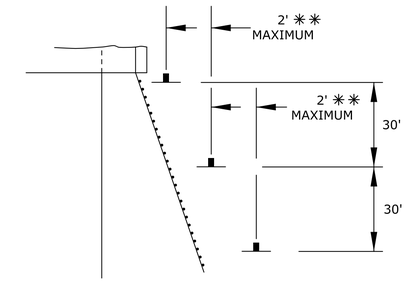

TYPICAL PLACEMENT OF
TYPE 3 OBJECT MARKERS

** - GUARD FENCE OR BARRIER

DELINEATION SPACING TABLE

	BEGINNING POINT	ENDING POINT	TYPICAL SPACINGS(1)	DELINEATOR TYPE AND COLOR	
				RIGHT EDGE	LEFT EDGE
A	END OF ACCELERATION LANE TAPER	PERPENDICULAR TO ENTRANCE RAMP GORE	100 FEET	"B" WHITE	"B" YELLOW
B	PERPENDICULAR TO ENTRANCE RAMP GORE	RAMP TERMINAL RADIUS	100 FEET	"A" WHITE	"A" YELLOW
C	END OF DECELERATION LANE TAPER	PERPENDICULAR TO EXIT RAMP GORE SIGN	100 FEET	"B" WHITE	"B" YELLOW
D	PERPENDICULAR TO EXIT RAMP GORE SIGN	RAMP TERMINAL RADIUS	100 FEET	"A" WHITE	"A" YELLOW
E	PERPENDICULAR TO EXIT RAMP GORE SIGN	END OF EXIT GORE TAPER	75-100 FT	"A" WHITE	"A" YELLOW
F	END OF EXIT GORE TAPER	ENTRANCE RAMP GORE	400-500 FT	"A" WHITE	"A" YELLOW
G	END OF ACCELERATION OR DECELERATION LANE TAPER	END OF ACCELERATION OR DECELERATION LANE TAPER	528 FT	"A" WHITE	"A" YELLOW
	BEGINNING OF CURVE FOR DIRECTION OF TRAVEL	END OF CURVE FOR DIRECTION OF TRAVEL	20-300 FT (2)	"A" WHITE	"A" YELLOW

(1) SPACINGS SHALL BE CONTINOUS AND UNIFORM.

(2) SPACING IS ROUNDED TO NEAREST FOOT USING THE FORMULA:

SPACING = 3 X $\sqrt{(\text{RADIUS} - 50)}$

NOTE:
SEE 'DELINEATION SPACING' AND 'PATTERN OF DELINEATION' TABLES AND/OR PLAN SHEET FOR TYPE, COLOR, AND SPACING OF DELINEATION. THE COLOR OF DELINEATION SHALL MATCH THE COLOR OF THE PAVEMENT MARKING EDGELINE.

DELINEATION SHALL BE LOCATED ON THE OUTSIDE EDGE OF MAINLINE, ACCELERATION LANES, DECELERATION LANES, RAMPS, AND CURVES. DELINEATION SHALL NOT BE USED ON CURVES OR LOOPS WHEN CHEVRONS (W1-8 SIGNS) ARE USED, EXCEPT AT THE ENTRANCE AND EXIT GORE AREAS. WHEN CHANGING FROM DELINEATING ONE EDGE OF THE ROADWAY TO THE OTHER EDGE, THE DELINEATION ON BOTH EDGES SHALL OVERLAP THE TYPICAL SPACING SHOWN IN THE DELINEATION SPACING TABLE.

WHEN DELINEATING A CURVE, THE FIRST DELINEATOR SHOULD BE LOCATED AT THE BEGINNING OF THE CURVE. THE SPACING ON THE CURVE SHALL NOT EXCEED THE TYPICAL SPACING FOR THE ROAD TYPE.

ALL DELINEATION USED WITHIN 100 FEET IN ADVANCE OF THE NOSE OF GUARD FENCE AND THROUGHOUT THE AREA WITH GUARD FENCE SHALL BE FLEXIBLE POST MOUNTED.

DELINEATION LOCATED ON A MEDIAN BETWEEN THE ENTRANCE AND EXIT RAMPS SHOULD BE INSTALLED ACCORDING TO MEDIAN WIDTH:

MEDIAN WIDTH LESS THAN 6 FT: DELINEATION INSTALLED BACK-TO-BACK ON A SINGLE POST ALONG THE MEDIAN CENTERLINE.

MEDIAN WIDTH GREATER THAN OR EQUAL TO 6 FT: DELINEATION INSTALLED AS SHOWN FOR THE TYPICAL DELINEATOR LOCATIONS.

THE SPACING SHALL BE AS SHOWN IN THE DELINEATION SPACING TABLE.

THE LONGITUDINAL LOCATION OF THE OBJECT MARKERS FROM THE STRUCTURE END SHALL BE A MAXIMUM SPACING OF 42"

TYPE 3 OBJECT MARKERS USAGE		
TWO-WAY ROADWAY (TWO LANES)		
WIDTH OF STRUCTURE	LEFT	RIGHT
LESS THAN 20 FT	3 (1)	3 (1)
20 FT TO LESS THAN 25 FT	1	3 (1)
25 FT TO LESS THAN 28 FT	1	3 (1)
28 FT TO LESS THAN 30 FT	1	3 (1)
30 FT TO LESS THAN 33 FT	1 (2)	1
ONE-WAY ROADWAY (ONE LANE)		
WIDTH OF STRUCTURE	LEFT	RIGHT
LESS THAN 25 FT	3 (1)	3 (1)
ONE-WAY ROADWAY (TWO LANES)		
WIDTH OF STRUCTURE	LEFT	RIGHT
LESS THAN 20 FT	-	-
20 FT TO LESS THAN 25 FT	3 (1)	3 (1)
25 FT TO LESS THAN 28 FT	3 (1)	3 (1)
28 FT TO LESS THAN 30 FT	3 (1)	3 (1)
30 FT TO LESS THAN 33 FT	1 (2)	1

NOTES:
THE TYPE 3 OBJECT MARKERS USAGE TABLE IS BASED ON BOTH SHOULDERS BEING EQUAL WIDTH. IF ONE SHOULDER WIDTH IS GREATER THAN OR EQUAL TO 6 FT, THEN INSTALL A TYPE 2 OBJECT MARKER ON THAT SIDE AND INSTALL A TYPE 3 OBJECT MARKER ON THE OTHER SIDE.
(1) - THE FIRST TWO TYPE 3 OBJECT MARKERS NOT REQUIRED IF THE GUARD FENCE HAS DELINEATION.
(2) - THE LEFT TYPE 3 OBJECT MARKER NOT REQUIRED IF STRUCTURE LESS THAN 10 FEET LONG.

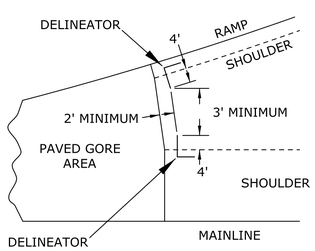

DETAIL "A"

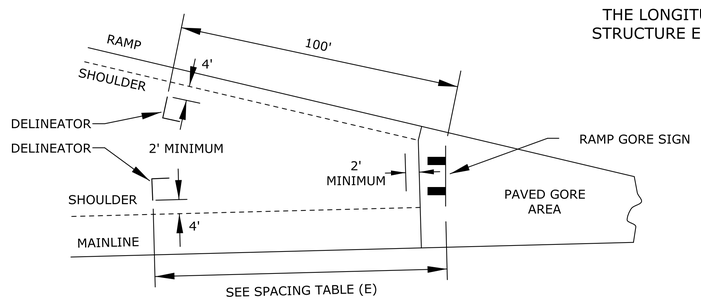

DETAIL "B"

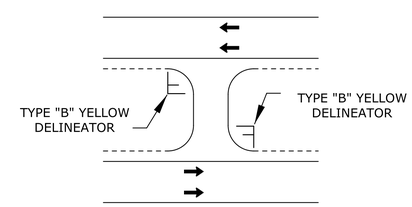

TYPICAL DELINEATOR LOCATION FOR
MEDIAN CROSS-OVER

NO.	DATE	REVISIONS	BY	APP'D
3				
2				
1				

KANSAS DEPARTMENT OF TRANSPORTATION

DESIGN DETAILS FOR
POSITIONING OF DELINEATORS &
OBJECT MARKERS (TYPES 2 & 3)

TE409 7/1/03

FHWA APPROVAL			7/22/2003	APP'D	Steven A. Buckley		
DESIGNED	D.D.G.	DETAILED	W.S.B.	QUANTITIES		TRACED	
DESIGN CK.	S.A.B.	DETAIL CK.	D.D.G.	QUAN. CK.		TRACE CK.	

Sh. No. 47

Plotted : 21-JUL-2015 13:38
Drawn By : bblizzard
File : TE409.dgn

STATE	PROJECT NO.	YEAR	SHEET NO.	TOTAL SHEETS
KANSAS	52 C-4611-01	2015	48	64

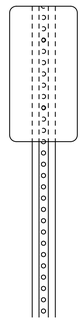

TYPE 2 OBJECT MARKER ASSEMBLY POSITIONS

FLAT SHEET OBJECT MARKERS:
SEE FLAT SHEET SIGN BLANK DETAIL SHEETS FOR THE ALUMINUM ALLOYS AND THICKNESS.

THE 6" X 12" OBJECT MARKER SIGN FACES SHALL BE COVERED WITH TYPE IV HIGH INTENSITY YELLOW RETROREFLECTIVE SHEETING.

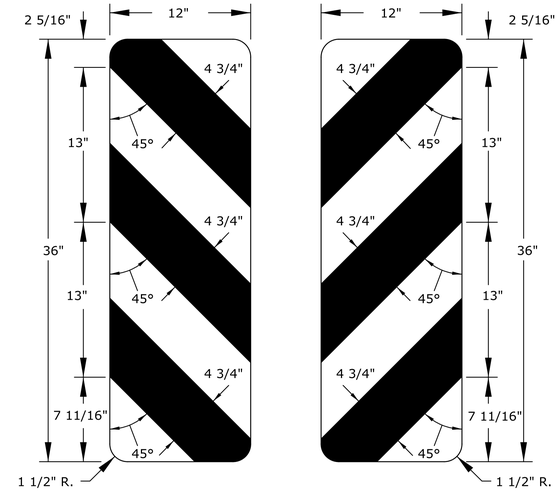

COLORS:
YELLOW (RETROREFLECTIVE)
BLACK (NON-REFLECTIVE)

FLAT SHEET OBJECT MARKERS:
SEE FLAT SHEET SIGN BLANK DETAIL SHEETS FOR THE ALUMINUM ALLOYS AND THICKNESS.

THE OBJECT MARKER SIGN FACE SHALL BE COVERED WITH TYPE IV HIGH INTENSITY YELLOW RETROREFLECTIVE SHEETING.

DETAILS FOR ATTACHING OBJECT MARKERS TO STEEL 'U' POSTS

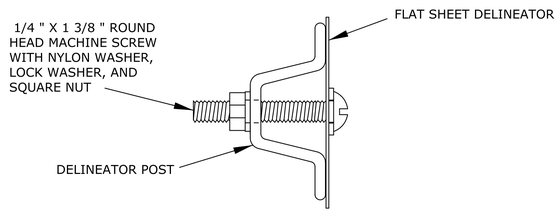

FLAT SHEET DELINEATOR MOUNTING

DETAILS FOR ATTACHING DELINEATORS TO STEEL DELINEATOR POSTS

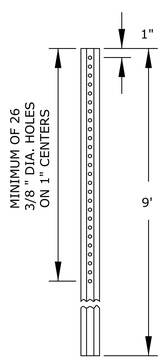

PUNCHING DETAILS

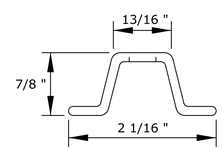

POST DIMENSIONS
(ALL DIMENSIONS SHOWN ARE NOMINAL)

STEEL 'U' POST DETAILS

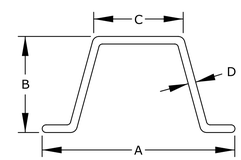

DIM.	2 LB/FT
A	3 1/8
B	1 17/32
C	1 1/4
D	1/8

(DIMENSIONS ARE NOMINAL)

2LB. 'U' POST DETAILS

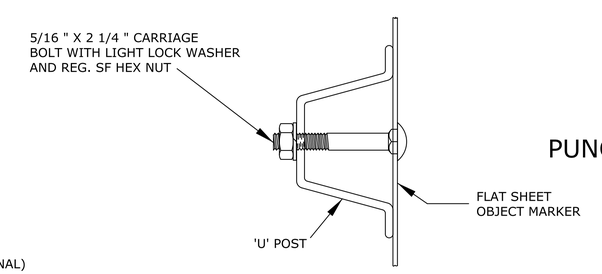

'U' POST MOUNTING DETAILS

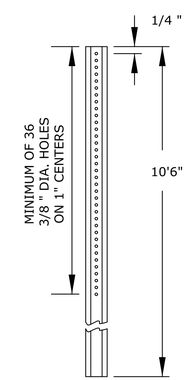

'U' POST PUNCHING DETAILS

ALL DIMENSIONS ARE IN INCHES UNLESS OTHERWISE NOTED.

NO.	DATE	REVISIONS	BY	APP'D
1	7/23/10	Changed Sheeting Type	D.D.G.	D.B.

KANSAS DEPARTMENT OF TRANSPORTATION

DESIGN DETAILS
FOR OBJECT MARKERS
TYPE 2 AND TYPE 3

TE415 7/1/03

FHWA APPROVAL			7/23/2010	APP'D	Steven A. Buckley		
DESIGNED	D.D.G.	DETAILED	W.S.B.	QUANTITIES		TRACED	
DESIGN CK.	S.A.B.	DETAIL CK.	D.D.G.	QUAN. CK.		TRACE CK.	

Plotted : 21-JUL-2015 13:38
Drawn By : bblizzard
File : TE415.dgn

STATE	PROJECT NO.	YEAR	SHEET NO.	TOTAL SHEETS
KANSAS	52 C-4611-01	2015	49	64

SCALE
PLAN: Lat. & Long. 10' 0 10' 20'

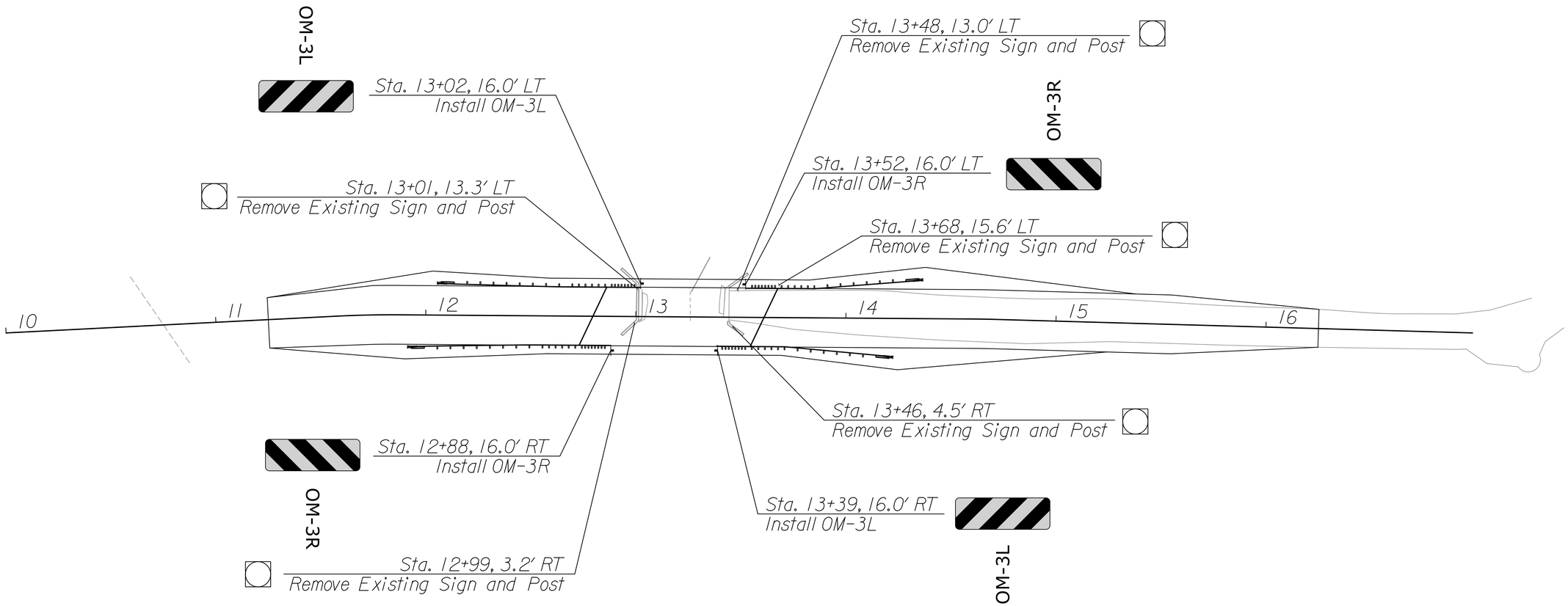

DATE	BY	
REFERENCES NOTED		
REFERENCES CHECKED		

Drawn By : bblizzard Plotted : 7/21/2015
File : G:\12902\Micro\Traffic\12902T5701.dgn

KANSAS DEPARTMENT OF TRANSPORTATION

SIGNING PLAN SHEET

STATE	PROJECT NO.	YEAR	SHEET NO.	TOTAL SHEETS
KANSAS	52 C-4611-01	2015	50	64

SUMMARY OF QUANTITIES

SIGNS

TYPE	NUMBER	SQUARE FEET
FLAT SHEET		
REINFORCED PANEL		
OVERLAY		

OBJECT MARKERS

TYPE	NUMBER
TYPE 2 ("U" POST)	
TYPE 3 ("U" POST)	4

SIGN STRUCTURES

TYPE	NEW	MODIFIED
OVERHEAD STRUCTURE		
CANTILEVER STRUCTURE		
BUTTERFLY STRUCTURE		
BRIDGE MOUNT ATTACHMENT		
MAST ARM SIGN SUPPORT		

DELINEATORS

TYPE	FLEXIBLE DELINEATOR		RIGID DELINEATOR	
	TYPE I ANCHOR	TYPE III ANCHOR	"U" POST	BRACKET MOUNT
TYPE 'A' WHITE				
TYPE 'A' YELLOW				
TYPE 'B' WHITE				
TYPE 'B' YELLOW				
TYPE 'A' WHITE (BACK TO BACK)				
TYPE 'A' YELLOW (BACK TO BACK)				

REMOVALS

TYPE	NUMBER
SIGNS	5
POSTS	5
FOOTINGS	
SIGN STRUCTURES	

POSTS AND ALUMINUM BEAMS

	4" x 6" POST			3I2.25 ALUMINUM BEAM	"U" POST		GALVANIZED STEEL BEAM POST						PERFORATED SQUARE STEEL TUBE (PSST)			
	WOOD		STEEL				W6x9		W10x12		W10x22					
	FLAT SHEET SIGN	REINFORCED PANEL SIGN	STRUCTURAL TUBING		2 LBS/FT	3 LBS/FT	A36 STEEL	A572 STEEL (ALT)	A36 STEEL	A572 STEEL (ALT)	A36 STEEL	A572 STEEL (ALT)	1-3/4"	2"	2-1/4"	2-1/2"
NUMBER																
FEET																

POST FOOTINGS AND PSST COUPLERS

	CONCRETE FOOTING (DIA.)					PERFORATED SQUARE STEEL TUBE (PSST)					
	WOOD	A36 STEEL		A572 STEEL (ALT)		PERFORATED SQUARE STEEL TUBE FOOTING				COUPLER	COUPLER WITH FOOTING
	18"	24"	30"	24"	30"	1-3/4"	2"	2-1/4"	2-1/2"		
NUMBER											
FEET											

BASE PLATES AND STUB POSTS

	W6x9		W10x12		W10x22	
	A36 STEEL	A572 STEEL (ALT)	A36 STEEL	A572 STEEL (ALT)	A36 STEEL	A572 STEEL (ALT)
BREAKAWAY BASES						
BASE PLATE (TOP)						
STUB POST WITH BASE PLATE						
NON-BREAKAWAY BASES						
BASE PLATE						

NUMBER & LENGTHS OF POSTS & ALUMINUM BEAMS (INFORMATION ONLY)

LENGTH OF POST OR BEAM	4" x 6" POST			3I2.25 ALUMINUM BEAM	"U" POST		GALVANIZED STEEL BEAM POST						PERFORATED SQUARE STEEL TUBE (PSST)			
	WOOD		STEEL				W6x9		W10x12		W10x22					
	FLAT SHEET SIGN	REINFORCED PANEL SIGN	STRUCTURAL TUBING		2 LBS/FT	3 LBS/FT	A36 STEEL	A572 STEEL (ALT)	A36 STEEL	A572 STEEL (ALT)	A36 STEEL	A572 STEEL (ALT)	1-3/4"	2"	2-1/4"	2-1/2"
2.1' - 4'																
4.1' - 6'																
6.1' - 8'																
8.1' - 10'																
10.1' - 12'																
12.1' - 14'																
14.1' - 16'																
16.1' - 18'																
18.1' - 20'																
20.1' - 22'																
22.1' - 24'																
24.1' - 26'																
26.1' - 28'																
28.1' - 30'																
30.1' - 32'																

NO.	DATE	REVISIONS	BY	APP'D
1	7/23/10	Revised Tables	D.D.G.	D.B.

KANSAS DEPARTMENT OF TRANSPORTATION

SUMMARY OF QUANTITIES FOR INSTALLATIONS AND REMOVALS

TE439 7/1/03

FHWA APPROVAL		7/23/2010	APP'D	Steven A. Buckley	
DESIGNED	D.D.G.	DETAILED	K.D.S.	QUANTITIES	TRACED
DESIGN CK.	S.A.B.	DETAIL CK.	D.D.G.	QUAN. CK.	TRACE CK.

Plotted : 21-JUL-2015 13:38

Drawn By : bblizzard

File : TE439.dgn

RECAPITULATION OF SIGNING & DELINEATION BID ITEMS

STATE	PROJECT NO.	YEAR	SHEET NO.	TOTAL SHEETS
KANSAS	52 C-4611-01	2015	51	64

BID ITEMS	APPROXIMATE QUANTITIES		UNITS
SIGN (FLAT SHEET) (HIGH PERFORMANCE)			SQUARE FOOT
SIGN (REINFORCED PANEL) (HIGH PERFORMANCE)			SQUARE FOOT
SIGN (OVERLAY) (HIGH PERFORMANCE)			SQUARE FOOT
SIGN POST (4" x 6" WOOD) (FLAT SHEET SIGN)			LINEAR FOOT
SIGN POST (4" x 6" WOOD) (REINFORCED PANEL SIGN)			LINEAR FOOT
SIGN POST (2 LB/FT "U" STEEL)			LINEAR FOOT
SIGN POST (3 LB/FT "U" STEEL)			LINEAR FOOT
SIGN POST (1-3/4" PERFORATED SQUARE STEEL TUBE)			LINEAR FOOT
SIGN POST (2" PERFORATED SQUARE STEEL TUBE)			LINEAR FOOT
SIGN POST (2-1/4" PERFORATED SQUARE STEEL TUBE)			LINEAR FOOT
SIGN POST (2-1/2" PERFORATED SQUARE STEEL TUBE)			LINEAR FOOT
SIGN POST (4" X 6" STRUCTURAL STEEL)			LINEAR FOOT
SIGN POST (3 I 2.25 ALUMINUM)			LINEAR FOOT
	A36	A572(ALT)	
SIGN POST (W6X9 STEEL BEAM)			LINEAR FOOT
SIGN POST (W10X12 STEEL BEAM)			LINEAR FOOT
SIGN POST (W10X22 STEEL BEAM)			LINEAR FOOT
SIGN POST STUB WITH BREAKAWAY BASE PLATE (W6X9)			EACH
SIGN POST STUB WITH BREAKAWAY BASE PLATE (W10X12)			EACH
SIGN POST STUB WITH BREAKAWAY BASE PLATE (W10X22)			EACH
SIGN POST BREAKAWAY BASE PLATE (W6X9)			EACH
SIGN POST BREAKAWAY BASE PLATE (W10X12)			EACH
SIGN POST BREAKAWAY BASE PLATE (W10X22)			EACH
SIGN POST FOOTING (24" Dia. CONCRETE)(STEEL BEAM POST)			LINEAR FOOT
SIGN POST FOOTING (30" Dia. CONCRETE)(STEEL BEAM POST)			LINEAR FOOT
SIGN POST FOOTING (18" Dia. CONCRETE)(WOOD POST)			LINEAR FOOT
SIGN POST FOOTING (1-3/4" PERFORATED SQUARE STEEL TUBE)			EACH
SIGN POST FOOTING (2" PERFORATED SQUARE STEEL TUBE)			EACH
SIGN POST FOOTING (2-1/4" PERFORATED SQUARE STEEL TUBE)			EACH
SIGN POST FOOTING (2-1/2" PERFORATED SQUARE STEEL TUBE)			EACH
SIGN POST FOOTING (SIGN POST SQUARE COUPLER) (2-1/4")			EACH
SIGN POST SQUARE COUPLER (2-1/4")			
SIGNING OBJECT MARKER (TYPE 2)			EACH
SIGNING OBJECT MARKER (TYPE 3)	4		EACH
SIGNING DELINEATOR (TYPE A)(WHITE RIGID, "U" POST)			EACH
SIGNING DELINEATOR (TYPE A)(YELLOW RIGID, "U" POST)			EACH
SIGNING DELINEATOR (TYPE B)(WHITE RIGID, "U" POST)			EACH
SIGNING DELINEATOR (TYPE B)(YELLOW RIGID, "U" POST)			EACH
SIGNING DELINEATOR (TYPE A)(WHITE FLEXIBLE)(TYPE I ANCHOR)			EACH
SIGNING DELINEATOR (TYPE A)(YELLOW FLEXIBLE)(TYPE I ANCHOR)			EACH
SIGNING DELINEATOR (TYPE B)(WHITE FLEXIBLE)(TYPE I ANCHOR)			EACH
SIGNING DELINEATOR (TYPE B)(YELLOW FLEXIBLE)(TYPE I ANCHOR)			EACH
SIGNING DELINEATOR (TYPE A)(WHITE FLEXIBLE)(TYPE 3 ANCHOR)			EACH
SIGNING DELINEATOR (TYPE A)(YELLOW FLEXIBLE)(TYPE 3 ANCHOR)			EACH
SIGNING DELINEATOR (TYPE B)(WHITE FLEXIBLE)(TYPE 3 ANCHOR)			EACH
SIGNING DELINEATOR (TYPE B)(YELLOW FLEXIBLE)(TYPE 3 ANCHOR)			EACH

BID ITEMS	APPROXIMATE QUANTITIES	UNITS

NOTE:
THE QUANTITIES FOR STEEL BEAM POSTS, STUB POSTS, BASE PLATES, AND FOOTINGS IN THE CONTRACT ARE FOR A36 STEEL. WHEN FURNISHING A572 ALTERNATE STEEL BEAM POSTS, STUB POSTS, BASE PLATES, AND FOOTINGS, PAYMENT FOR THESE ITEMS WILL BE BASED ON THE A36 STEEL UNIT PRICES INCLUDED IN THE CONTRACT.

NO.	DATE	REVISIONS	BY	APP'D
1	7/23/10	Changed Bid Items as per Spec Book (2007)	D.D.G.	D.B.

KANSAS DEPARTMENT OF TRANSPORTATION
RECAPITULATION OF SIGNING & DELINEATION BID ITEMS

TE450 7/1/03

FHWA APPROVAL 7/23/2010 APP'D Steven A. Buckley
DESIGNED D.D.G. DETAILED K.D.S. QUANTITIES TRACED
DESIGN CK. S.A.B. DETAIL CK. D.D.G. QUAN. CK. TRACE CK.

Plotted : 21-JUL-2015 13:38
Drawn By : bblizzard
File : TE450.dgn

STATE	PROJECT NO.	YEAR	SHEET NO.	TOTAL SHEETS
KANSAS	52 C-4611-01	2015	52	64

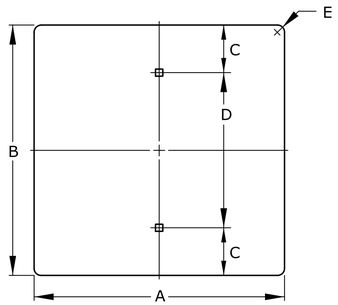

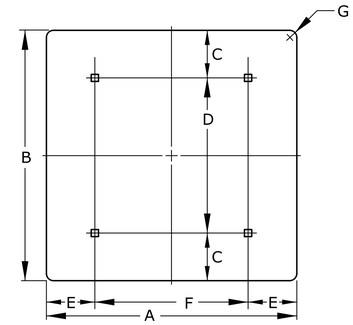

	SIGN SIZE	A	B	C	D	E	T	AREA
1	3 X 8	3	8	1	6	3/8	0.040	0.17
	6 X 12	6	12	3	6	3/8	0.040	0.50
	12 X 6	12	6	1 1/2	3	3/8	0.063	0.50
	12 X 18	12	18	3	12	1 1/2	0.063	1.50
	12 X 24	12	24	3	18	1 1/2	0.080	2.00
	12 X 36	12	36	6	24	1 1/2	0.080	3.00
	12 X 48	12	48	6	36	1 1/2	0.080	4.00
	15 X 15	15	15	1 1/2	12	1 1/2	0.063	1.56
	18 X 6	18	6	1 1/2	3	1 1/2	0.063	0.75
	18 X 12	18	12	3	6	1 1/2	0.063	1.50
	18 X 18	18	18	3	12	1 1/2	0.063	2.25
	18 X 24	18	24	3	18	1 1/2	0.080	3.00
	21 X 15	21	15	1 1/2	12	1 1/2	0.080	2.19
	24 X 6	24	6	1 1/2	3	1 1/2	0.080	1.00
	24 X 12	24	12	3	6	1 1/2	0.080	2.00
	24 X 18	24	18	3	12	1 1/2	0.080	3.00
	24 X 24	24	24	3	18	1 1/2	0.080	4.00
	24 X 30	24	30	3	24	1 1/2	0.080	5.00
	24 X 36	24	36	6	24	1 1/2	0.080	6.00
	30 X 15	30	15	1 1/2	12	1 1/2	0.080	3.13
	30 X 18	30	18	3	12	1 1/2	0.080	3.75
	30 X 24	30	24	3	18	1 1/2	0.080	5.00
	30 X 30	30	30	3	24	1 1/2	0.080	6.25
	30 X 36	30	36	6	24	1 1/2	0.080	7.50
	36 X 12	36	12	3	6	1 1/2	0.080	3.00
	36 X 18	36	18	3	12	1 1/2	0.080	4.50
	36 X 24	36	24	3	18	1 1/2	0.080	6.00
	36 X 30	36	30	3	24	1 1/2	0.080	7.50
	36 X 36	36	36	6	24	2	0.080	9.00

	SIGN SIZE	A	B	C	D	E	F	G	T	AREA
	36 X 12	36	12	3	6	6	24	1 1/2	0.080	3.00
	36 X 18	36	18	6	12	6	30	1 1/2	0.080	4.50
	36 X 24	36	24	6	12	6	24	1 1/2	0.080	6.00
	36 X 30	36	30	6	18	6	30	1 1/2	0.080	7.50
	36 X 36	36	36	6	24	6	24	1 1/2	0.080	9.00
	36 X 42	36	42	6	30	6	30	1 1/2	0.080	10.50
	48 X 12	48	12	3	6	9	30	1 1/2	0.080	4.00
	48 X 18	48	18	3	12	9	30	1 1/2	0.080	6.00
	48 X 24	48	24	6	12	9	30	2	0.080	8.00
	48 X 30	48	30	6	18	9	30	0	0.100	10.00
	48 X 36	48	36	6	24	9	30	0	0.100	12.00
	48 X 42	48	42	6	30	9	30	0	0.100	14.00
	48 X 48	48	48	9	30	9	30	0	0.100	16.00
2	48 X 72	48	72	15	42	9	30	0	0.100	24.00
2	48 X 96	48	96	21	54	9	30	0	0.100	32.00
	54 X 36	54	36	6	30	12	30	0	0.100	13.50
	54 X 42	54	42	6	30	12	30	0	0.100	15.75
	60 X 12	60	12	3	6	12	36	0	0.100	5.00
	60 X 18	60	18	3	12	12	36	0	0.100	7.50

SIGN SIZE	A	B	C	D	E	F	G	T	AREA
60 X 24	60	24	6	12	12	36	0	0.100	10.00
60 X 30	60	30	6	18	12	36	0	0.100	12.50
60 X 36	60	36	6	24	12	36	0	0.100	15.00
60 X 42	60	42	6	30	12	36	0	0.100	17.50
60 X 48	60	48	9	30	12	36	0	0.100	20.00
60 X 60	60	60	12	36	12	36	0	0.100	25.00
72 X 12	72	12	3	6	15	42	0	0.100	6.00
72 X 18	72	18	3	12	15	42	0	0.100	9.00
72 X 24	72	24	6	12	15	42	0	0.100	12.00
72 X 30	72	30	6	18	15	36	0	0.100	15.00
72 X 36	72	36	6	24	15	42	0	0.100	18.00
72 X 42	72	42	6	30	15	42	0	0.100	21.00
72 X 48	72	48	9	30	15	42	0	0.100	24.00
84 X 18	84	18	6	12	15	48	0	0.100	10.50
84 X 30	84	30	6	18	18	48	0	0.100	17.50
84 X 36	84	36	6	24	18	48	0	0.100	21.00
84 X 42	84	42	6	30	18	48	0	0.100	24.50
84 X 48	84	48	9	30	18	48	0	0.100	28.00

NOTE:
ALL HOLES ARE 3/8 " SQUARE, UNLESS OTHERWISE NOTED.

THE DIMENSION "T" IS THE THICKNESS OF THE ALUMINUM BLANK.

1 HOLES SHALL BE 5/16 " DIAMETER.

2 DIMENSION "D" REQUIRES A CENTER HOLE.

ALL DIMENSIONS ARE IN INCHES.

NO.	DATE	REVISIONS	BY	APP'D

KANSAS DEPARTMENT OF TRANSPORTATION

SIGN BLANK DETAILS FOR FLAT SHEET SIGNS

TE506 7/1/03

FHWA APPROVAL	7/22/2003	APP'D	Steven A. Buckley		
DESIGNED	D.D.G.	DETAILED	A.A.D.	QUANTITIES	TRACED
DESIGN CK.	S.A.B.	DETAIL CK.	D.D.G.	QUAN. CK.	TRACE CK.

Drawn By : bblizzard
File : TE506.dgn
Plotted : 21-JUL-2015 13:38

STATE	PROJECT NO.	YEAR	SHEET NO.	TOTAL SHEETS
KANSAS	52 C-4611-01	2015	53	64

LEGEND

- Single-Post Sign
- Double-Post Sign
- Type III Barricades
- Construction Area

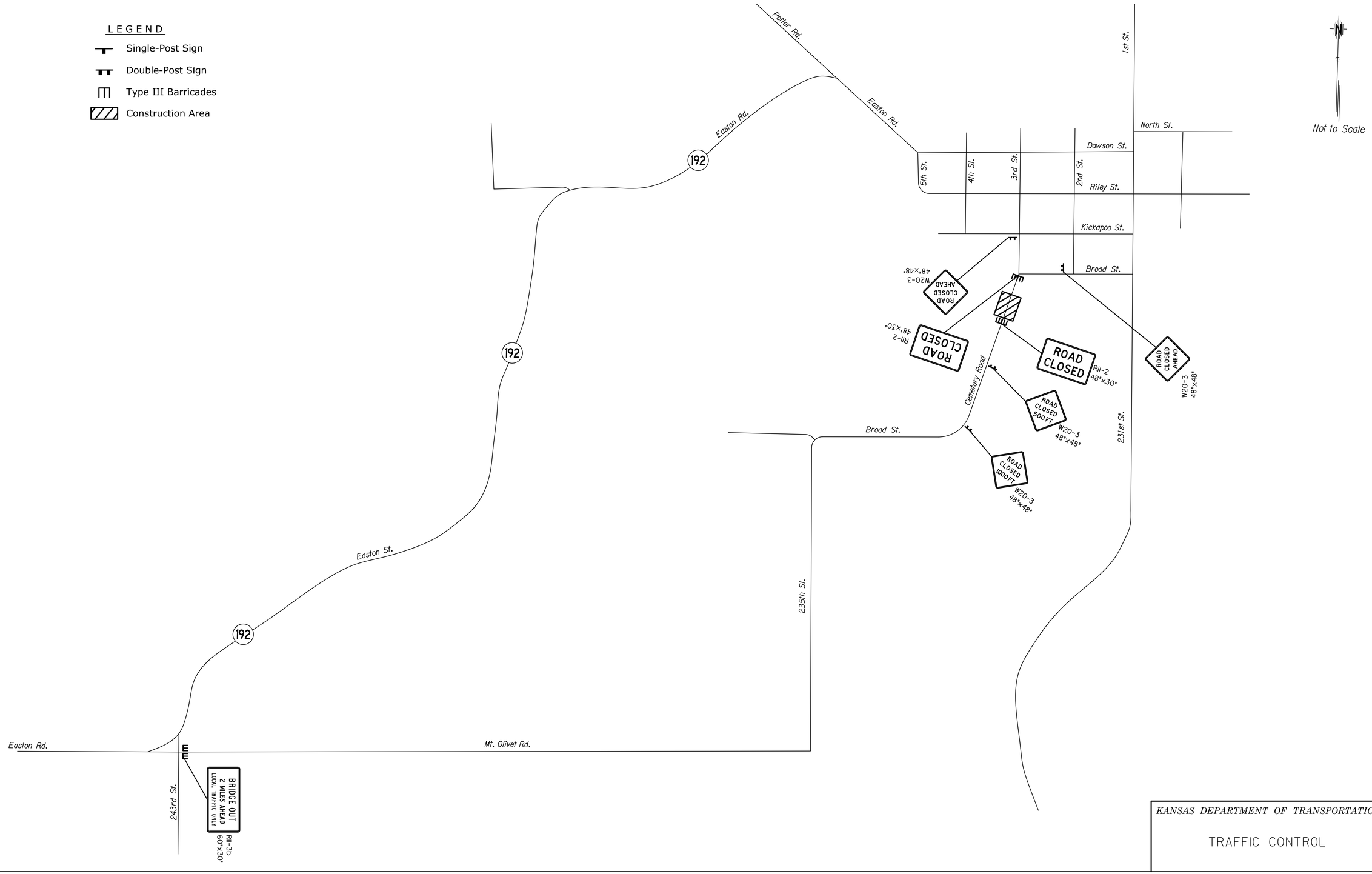

KANSAS DEPARTMENT OF TRANSPORTATION

TRAFFIC CONTROL

	BY	DATE
REFERENCES NOTED		
REFERENCES CHECKED		

Drawn By : bblizzard Plotted : 7/21/2015
File : G:\12902\Micro\Traffic\12902T5801.dgn

STATE	PROJECT NO.	YEAR	SHEET NO.	TOTAL SHEETS
KANSAS	52 C-4611-01	2015	54	64

1) Design Speed: Those items delegated to temporary traffic control should be designed and installed using the posted/legal speed of the roadway prior to work starting.

2) Minimum lane width: Lane widths shall be a minimum of 11' (measured between centerlines of pavement markings) or as shown on the plans, or as directed by the engineer. A lane width less than 11' may require restricted roadway width signing.

3) Consideration should be made to seperate pedestrian and, if needed, bicycle movements from both work site activity and vehicular traffic. Unless a reasonable safe route that does not involve crossing the roadway can be provided, pedestrians should be appropriately directed with advance signing that encourages them to cross to the opposite side of the roadway. In urban and suburban areas with high vehicular traffic volumes, these signs should be placed at intersections (rather than midblock locations) so that pedestrians are not confronted with midblock work sites that will induce them to attempt skirting the work site or making a midblock crossing.

4) When existing pedestrian facilities are disrupted, closed, or relocated, the temporary facilities shall be detectable and include accessiblity features consistent with the features present in the existing pedestrian facility.

5) When the driving surface open to traffic is milled, is a temporary surface made of loose material, or when directed by the engineer use the W8-15 (Grooved Pavement) or W8-7(Loose Gravel) a "C" distance after the W20-1 (Road Work Ahead) on mainline approaches. Signs may be used with the W8-15p motorcycle plaque as directed by the engineer. Display signs in advance of the condition as long as the condition is present.

6) Alternative temporary rumble strip options may be available. Please contact the Temporary Traffic Control Unit for more information at 785-296-0355 or 785-296-1183.

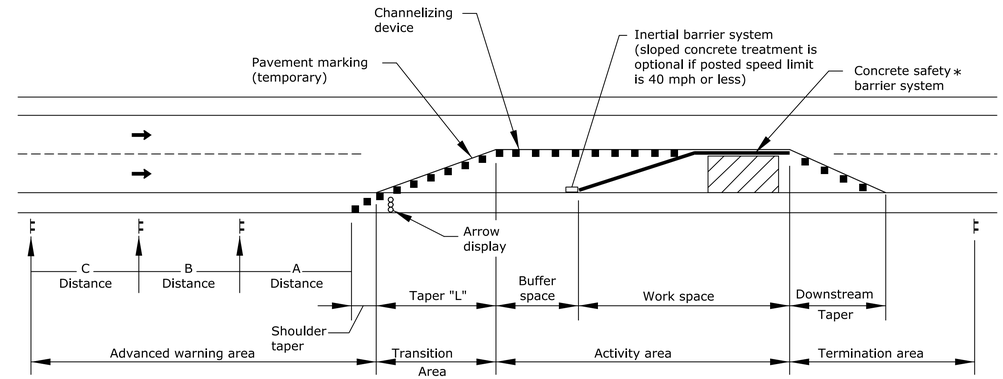

TYPICAL WORK ZONE COMPONENTS

* When concrete barrier system is used, portable channelizing devices are not needed along the tangent barrier section.

Minimum advance warning sign spacing (in feet):

SPEED (MPH) ✳	*A*	*B*	*C*
URBAN (40 MPH OR LOWER)	*100*	*100*	*100*
URBAN (45 MPH OR HIGHER)	*350*	*350*	*350*
RURAL (55 MPH OR LOWER)	*500*	*500*	*500*
RURAL (60 MPH OR HIGHER)	*750*	*750*	*750*
EXPRESSWAY/FREEWAY	*1000*	*1500*	*2640*

✳ Posted speed prior to work starting

The minimum spacing between signs shall be no less than 100', unless directed by the engineer.

The spacing between any signs may be increased beyond the minimum values in the table above as approved by the engineer in order to maximize visibility.

Taper Formulas:

$L = WS$ for speeds of 45 MPH or more

$L = WS^2/60$ for speeds of 40 MPH or less

Where: L =Minimum length of taper in feet
S =Numericial value of posted speed prior to work starting in MPH
W =Width in offset feet

Shifting taper=1/2 L
Shoulder taper=1/3 L

Buffer Space

SPEED (MPH) ✳	*20*	*25*	*30*	*35*	*40*	*45*	*50*	*55*	*60*	*65*	*70*	*75*
LENGTH (ft)	*115*	*155*	*200*	*250*	*305*	*360*	*425*	*495*	*570*	*645*	*730*	*820*

✳ Posted speed prior to work starting

Neither work activity nor storage of equipment, vehicles, or material should occur in the buffer space. When a protection vehicle is placed in advance of the work space, only the space upstream of the vehicle constitutes the buffer space.

If temporary concrete safety barrier system is used to seperate approaching traffic from the work space, the barrier system shall be considered part of the activity area. A full lane width should be available throughout the length of the buffer space. See typical work zone components above.

NO.	DATE	REVISIONS	BY	APP'D
3				
2				
1				

KANSAS DEPARTMENT OF TRANSPORTATION

TRAFFIC CONTROL
GENERAL NOTES

TE700

FHWA APPROVAL		06/01/15	APP'D	Kristina Ericksen	
DESIGNED	B.A.H.	DETAILED	R.W.B	QUANTITIES	TRACED
DESIGN CK.		DETAIL CK.		QUAN. CK.	TRACE CK.

KDOT Graphics Certified 06-01-2015

KDOT Graphics Certified

Sh. No. 54

Drawn By : bblizzard
File : te700.dgn

Plotted : 21-JUL-2015 13:38

STATE	PROJECT NO.	YEAR	SHEET NO.	TOTAL SHEETS
KANSAS	52 C-4611-01	2015	55	64

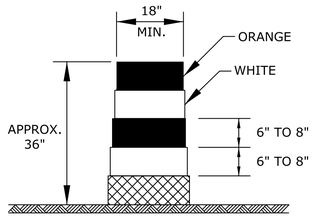

DRUM

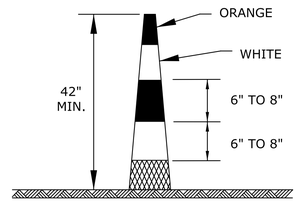

CONICAL DELINEATOR

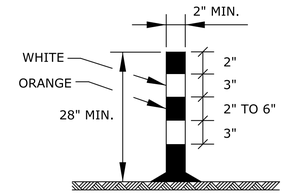

TUBULAR MARKER

Striping as shown for up to 42".

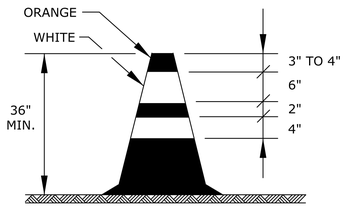

TRAFFIC CONE

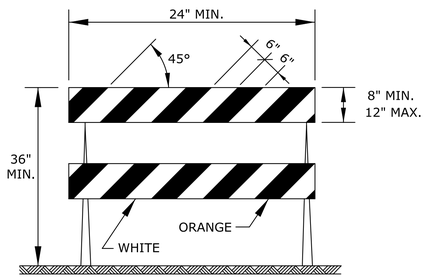

TYPE 2 BARRICADE

For rails less than 36" long, 4" wide stripes may be used.
All stripes shall slope downward to the traffic side for channelization.

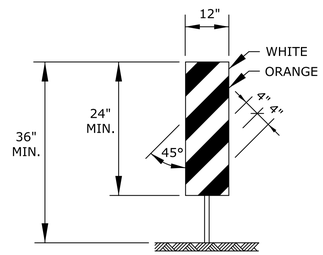

VERTICAL PANEL

The stripes shall slope downward to the traffic side for channelization.

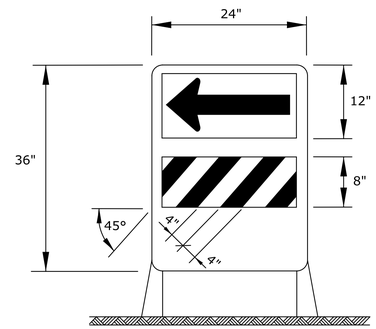

DIRECTION INDICATOR BARRICADE

The stripes shall slope downward in the direction traffic is to pass.
The direction indicator barricade shall be used in series to direct the motorist into the intended lane of travel.

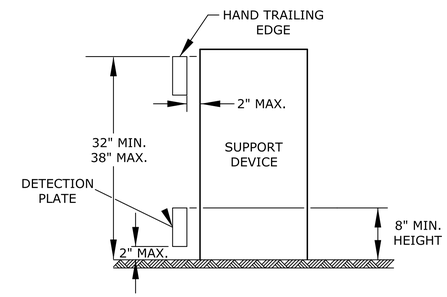

PEDESTRIAN CHANNELIZER

1. Support device shall not project beyond the detection plate into the pathway.
2. Hand trailing edges and detection plates are optional for continuous walls.
3. Interconnect pedestrian channelizers to prevent displacement and to provide continuous guidance through or around work.
4. Alternate pathways shall be firm, stable, and slip resistant.
5. Treat height differentials > 1/2" in the surfaces of alternate paths with a firm, stable, and slip resistant temporary ramp having a slope of 12:1 or flatter and having a width equal to the alternate path.
6. Use alternating orange/white on interconnected devices.

ITEM	LOCATION	Cross-overs	Shoofly Diversions	Tangents	Tapers	Ramps	Head to Head	Object Identifier	Lead-in Devices	Gores
PORTABLE										
	Drums	Yes	Yes	Yes	Yes	Yes	(1)	Yes	Yes	Yes
	Conical Delineators	Yes	Yes	Yes	Yes	Yes	(1)	Yes	Yes	Yes
	Vertical Panels	(2)	(2)	(2)	(2)	(2)	(1,2)	YES	(2)	(2)
	Direction Indicator Barricade	NO	NO	NO	Yes	NO	NO	NO	NO	NO
	Type 2 Barricade	(2)	(2)	(2)	(2)	NO	NO	Yes	NO	NO
	Traffic Cones	NO	NO	(4)	(4)	(4)	NO	(4)	(4)	(4)
FIXED										
	Tubular Markers	(3)	(3)	(3)	NO	(3)	Yes	NO	Yes	Yes
	Vertical Panels	(3)	(3)	(3)	(3)	(3)	(3)	Yes	(2,3)	(2)

(1) Not allowed on centerline delineation along freeways or expressways.
(2) The stripes shall slope downward to the traffic side for channelization.
(3) May be used upon the approval of the engineer.
(4) Daytime operations only.

NO.	DATE	REVISIONS	BY	APP'D
3				
2				
1				

KANSAS DEPARTMENT OF TRANSPORTATION

TRAFFIC CONTROL
CHANNELIZING DEVICES

TE702

FHWA APPROVAL		06/01/15	APP'D	Kristina Ericksen	
DESIGNED	L.E.R.	DETAILED	R.W.B.	QUANTITIES	TRACED
DESIGN CK.		DETAIL CK.		QUAN. CK.	TRACE CK.

KDOT Graphics Certified 06-01-2015

Sh. No. 55

KDOT Graphics Certified

Plotted : 21-JUL-2015 13:38

Drawn By : bblizzard
File : te702.dgn

STATE	PROJECT NO.	YEAR	SHEET NO.	TOTAL SHEETS
KANSAS	52 C-4611-01	2015	56	64

Note: Signs shown for one approach to work zone.

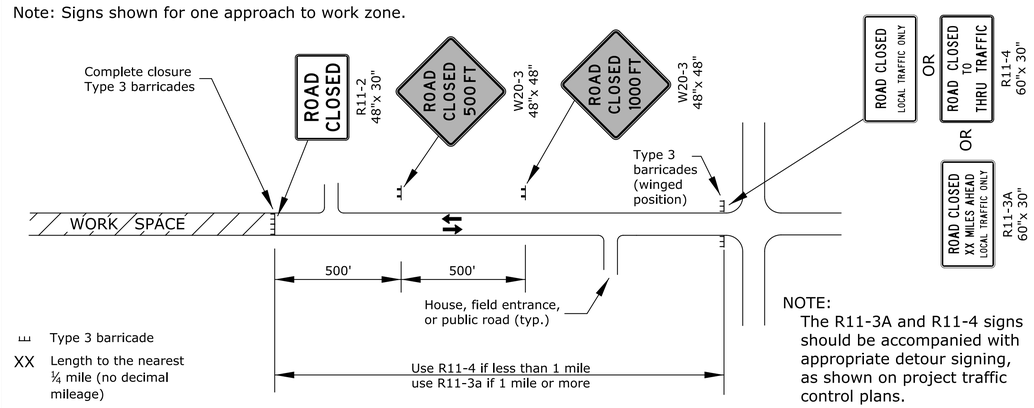

NOTE:
The R11-3A and R11-4 signs should be accompanied with appropriate detour signing, as shown on project traffic control plans.

FIGURE 1: TYPICAL SIGNING FOR ROAD CLOSURE (MAINLINE OR SIDE ROAD)

Note: Sign shown for one approach to intersection (work zone).

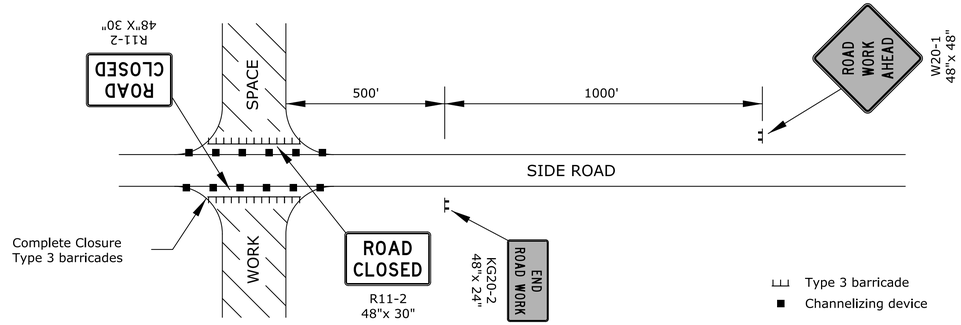

FIGURE 2: TYPICAL SIGNING FOR SIDE ROAD OPEN

Note: Signs shown for one approach to work zone.

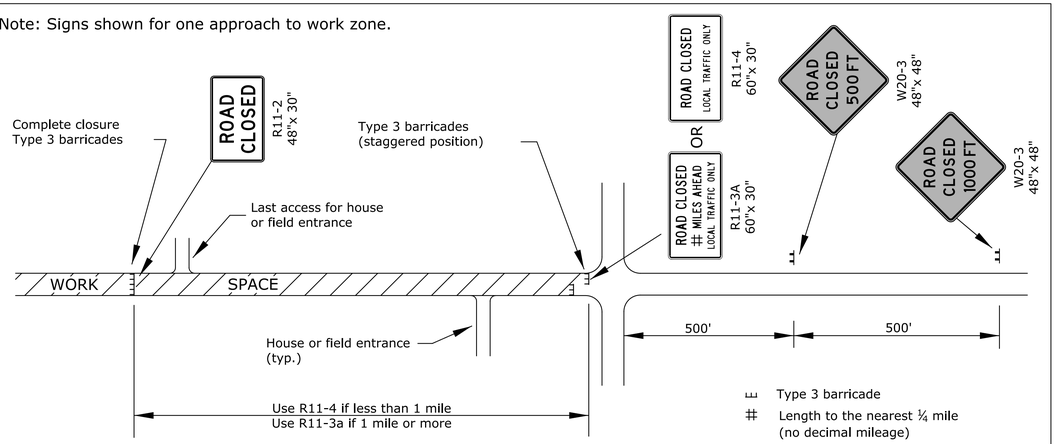

FIGURE 3: TYPICAL SIGNING FOR ROAD CLOSURE - LOCAL TRAFFIC ACCESS

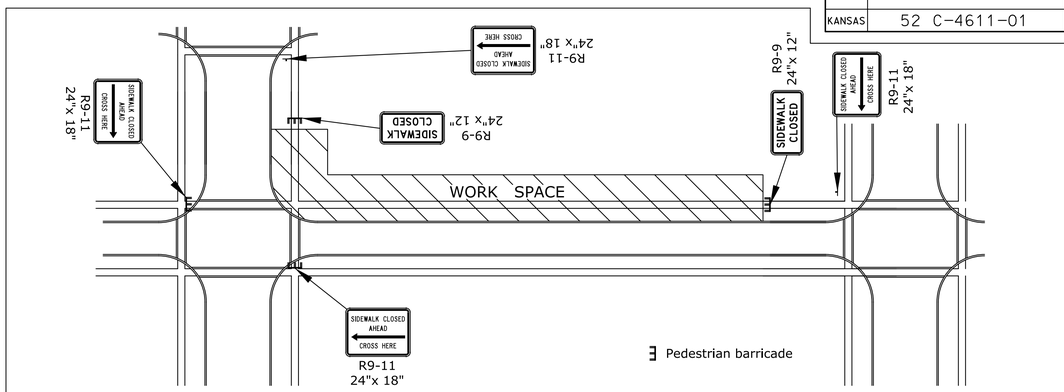

FIGURE 4: TYPICAL SIGNING FOR SIDEWALK CLOSED WITH OPPOSITE SIDEWALK AVAILABLE

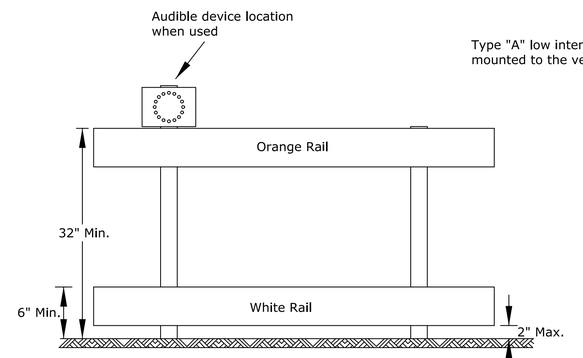

DETECTABLE BARRICADE

1. Support device shall not project beyond the detection plate into the pathway.
2. Barricades shall be used to close the entire width of the pathway.
3. Do not use warning lights on pedestrian barricades.
4. Do not use warning lights on audible devices.

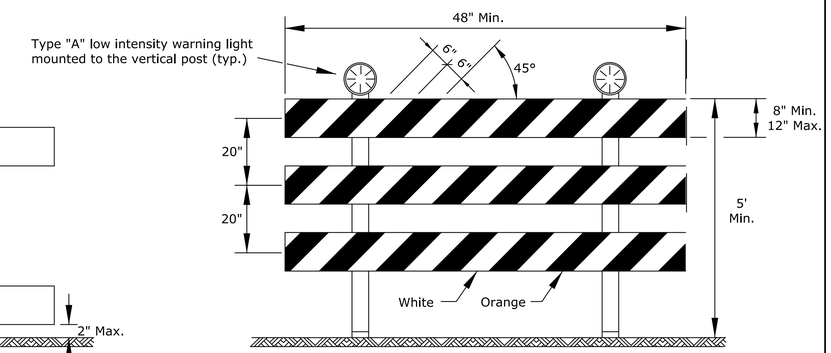

TYPE 3 BARRICADE WITH LIGHTS

Approved signs mounted on Type 3 barricades should not cover more than 50% of the top two rails or 33% of the total area of the three rails.

When barricades are placed end-to-end or staggered, a Type "A" low intensity warning light shall be mounted to the vertical post near each outside corner of the end barricades.

ROAD CLOSED GENERAL NOTES

As shown in Figure 1, at the point where thru traffic must detour and local traffic can proceed to the location where the roadway is completely closed, the R11-3a (ROAD CLOSED # MILES AHEAD LOCAL TRAFFIC ONLY) or R11-4 (ROAD CLOSED LOCAL TRAFFIC ONLY or ROAD CLOSED TO THRU TRAFFIC) sign shall be used with Type 3 barricades (winged position), placed on the shoulders of roadway.

As shown in Figure 3, when local traffic must be allowed access into the work zone, Type 3 barricades shall be longitudinally staggered to maintain the appearance of a closed roadway. A second line of end-to-end Type 3 barricades shall be placed just beyond the last access point in the work zone, to completely close the roadway.

The R11-4 (ROAD CLOSED TO THRU TRAFFIC or ROAD CLOSED LOCAL TRAFFIC ONLY) sign shall be used when the distance to the point of complete closure of the roadway is less than 1 mile.

The R11-3a (ROAD CLOSED # MILES AHEAD LOCAL TRAFFIC ONLY) sign shall be used when the distance to the point of complete closure of the roadway is 1 mile or greater.

The words "BRIDGE OUT" (or BRIDGE CLOSED) may be substituted for the words "ROAD CLOSED" on the R11-3a or R11-4 sign where applicable.

NO.	DATE	REVISIONS	BY	APP'D
3				
2				
1				

KANSAS DEPARTMENT OF TRANSPORTATION

TRAFFIC CONTROL CLOSURES

TE704

FHWA APPROVAL		06/01/15	APP'D	Kristina Ericksen			
DESIGNED	B.A.H.	DETAILED	R.W.B.	QUANTITIES		TRACED	
DESIGN CK.		DETAIL CK.		QUAN. CK.		TRACE CK.	

KDOT Graphics Certified 06-01-2015

Sh. No. 56

KDOT Graphics Certified

Plotted : 21-JUL-2015 13:38

Drawn By : bblizzard
File : te704.dgn

STATE	PROJECT NO.	YEAR	SHEET NO.	TOTAL SHEETS
KANSAS	52 C-4611-01	2015	57	64

SIGN LAYOUT INFORMATION

KG20-2

STD. SIZE
EXPWY/FREEWAY
6" C
48"x 24"

KG20-5

STD. SIZE
EXPWY/FREEWAY
6" C
48"x 24"

KM4-2O

STD. SIZE
3" C
24"x 6"

EXPWY/FREEWAY
6" C
48"x 12"

W7-3a

Mileage to be determined by the engineer.

W8-17

STD. SIZE
EXPWY/FREEWAY
48"x 48"

W8-15

STD. SIZE
EXPWY/FREEWAY
8" D
48"x 48"

W8-7

STD. SIZE
EXPWY/FREEWAY
8" D
48"x 48"

W8-15p

STD. SIZE
EXPWY/FREEWAY
30"x 24"

W8-11

STD. SIZE
EXPWY/FREEWAY
8" D
48"x 48"

W8-17P
(OPTIONAL)

STD. SIZE
EXPWY/FREEWAY
30"x 24"

SP-01
(SPECIAL SIGN)

STD. SIZE
6" C

EXPWY/FREEWAY
10" D

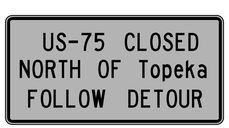

SP-02
(SPECIAL SIGN)

STD. SIZE	EXPWY/FREEWAY
UPPERCASE: 6" C	UPPERCASE: 10" D
LOWERCASE: 4.5" C	LOWERCASE: 8" D

ALL CITY NAMES AND STREET NAMES ON SPECIAL SIGNS AND DESTINATION SIGNS MUST HAVE UPPER AND LOWER CASE LETTERS.

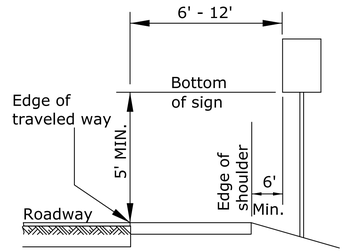

Rural

1) Ground-mounted signs shall be mounted at a minimum height of 5' measured from the bottom of sign to the near edge of the pavement.

2) Large signs having an area exceeding 50 square feet installed on multiple breakaway posts shall be mounted a minimum of 7' above the ground.

3) The height of the secondary sign mounted below another sign may be 4' measured from the bottom of the sign to the near edge of the pavement. Signs shall not overlap each other.

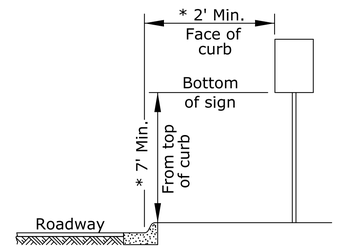

Urban

1) Signs shall be mounted at a minimum height of 7' measured from the bottom of sign to the near edge of the pavement.

2) Neither portable nor permanent sign supports should be located on sidewalks or areas designated for pedestrian or bicycle traffic.

3) Signs mounted lower than 7' should not project more than 4" into pedestrian facilities.

4) The height from of the secondary sign mounted below another sign may be 6' measured from the bottom of sign to the near edge of the pavement. Signs shall not overlap each other.

5) Large signs having an area exceeding 50 square feet installed on multiple breakaway posts shall be mounted a minimum of 7' above the ground.

* 6) Pedestrian detour signing shall be a minimum of 2' measured from the top of the pedestrian pathway to the bottom of the sign and shall not protrude into the walkway nor shall it project beyond the back of curb.

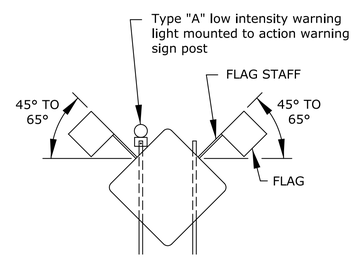

When the sign width is equal to or greater than 9', three or more wood posts may be used with a minimum of 4' between the centerline of each post. All signs less than 9' in width shall use a maximum of two wood posts.

In the case of hitting rock when driving posts
1. Shift the sign location. Do not violate minimum sign spacing.
2. With the engineer's approval, use acceptable alternative sign stands.

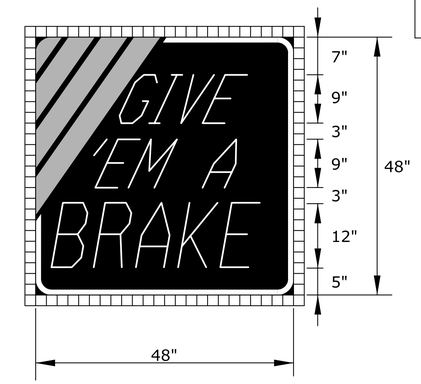

KI-104a

SIGN NUMBER	GIVE EM A BRAKE
WIDTH x HEIGHT	4'-0" x 4'-0"
BORDER WIDTH	1.0"
CORNER RADIUS	4.0"
STRIPE WIDTH	3.0"
MOUNTING	GROUND
BACKGROUND	TYPE: NON-REFLECTIVE
	COLOR: BLACK
LEGEND/BORDER	TYPE: REFLECTIVE
	COLOR: WHITE
LEGEND FONT	DUTCH 801 ROMAN SWC 25 DEGREE SLANT
STRIPES	TYPE: REFLECTIVE
	COLOR: ORANGE

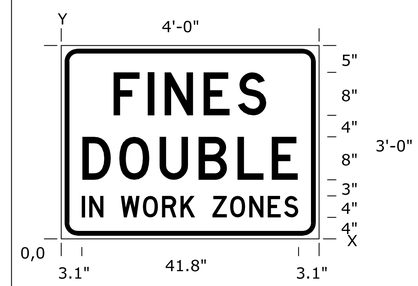

KI-105a

SIGN NUMBER	FINES DOUBLE
WIDTH x HEIGHT	4'-0" x 3'-0"
BORDER WIDTH	0.9"
CORNER RADIUS	3.0"
MOUNTING	GROUND
BACKGROUND	TYPE: REFLECTIVE
	COLOR: WHITE
LEGEND/BORDER	TYPE: NON-REFLECTIVE
	COLOR: BLACK

DIMENSIONS IN INCHES

SPACINGS ARE TO START OF NEXT LETTER

LETTER SPACINGS

Y FONT																	HT LEN
23.0 D	X	F	I	N	E	S	X										8.0
	9.7	6.4	3.2	7.3	6.4	5.4	9.7										28.6
11.0 D	X	D	O	U	B	L	E	X									8.0
	3.9	6.9	7.5	7.3	7.3	6.4	4.9	3.9									40.3
4.0 D	X	I	N	X	W	O	R	K	X	Z	O	N	E	S	X		4.0
	3.1	1.6	2.7	3.2	4.3	3.8	3.6	2.8	3.2	3.4	3.8	3.6	3.2	2.7	3.1		41.8

Notes:

Typically, there are two sets of informational signs installed per project: one for each direction of traffic.

Install signs a minimum of 500' in advance of the road work ahead sign. The engineer may designate a more appropriate location if conditions dictate.

The informational signs are not to interfere with the traffic control signs for the project.

NO.	DATE	REVISIONS	BY	APP'D
3				
2				
1				

KANSAS DEPARTMENT OF TRANSPORTATION

TRAFFIC CONTROL
SIGN INFORMATION

TE710

FHWA APPROVAL		06/01/15	APP'D	Kristina Pyle	
DESIGNED	R.W.B.	DETAILED	R.W.B.	QUANTITIES	TRACED
DESIGN CK.		DETAIL CK.		QUAN. CK.	TRACE CK.

KDOT Graphics Certified 06-01-2015

Sh. No. 57

KDOT Graphics Certified

Plotted : 21-JUL-2015 13:38

Drawn By : bblizzard
File : te710.dgn

STATE	PROJECT NO.	YEAR	SHEET NO.	TOTAL SHEETS
KANSAS	52 C-4611-01	2015	58	64

Perforated square steel tube (P.S.S.T.) post setup

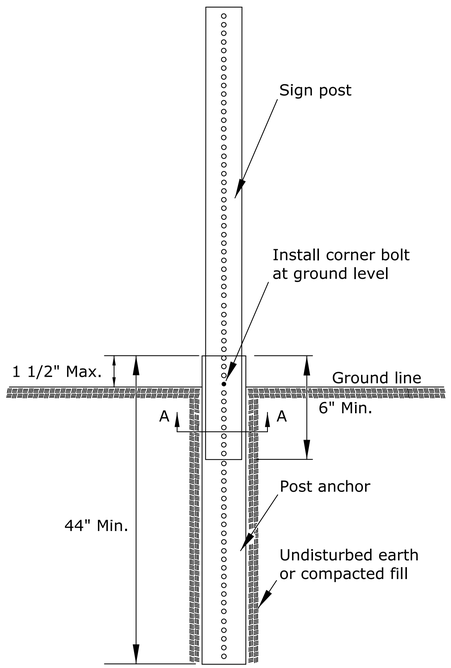

P.S.S.T. detail

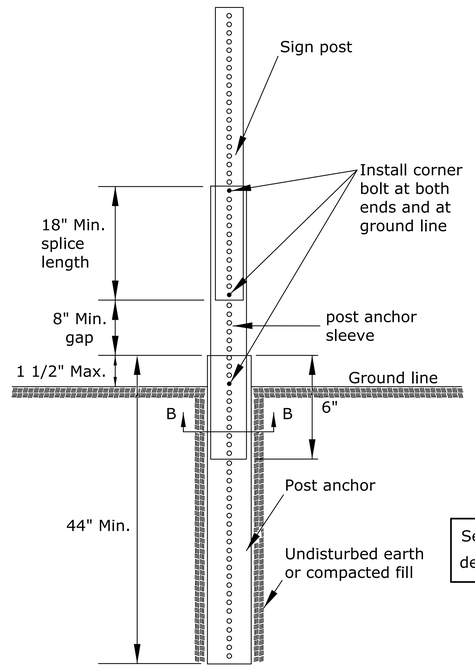

Telescoping P.S.S.T. detail

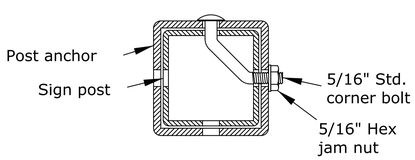

Section A-A

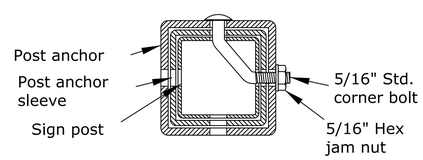

Section B-B

Details for 2", 2 1/4", or 2 1/2" sign posts

Place bolts in the same corner along each sign post.

Wood post setup

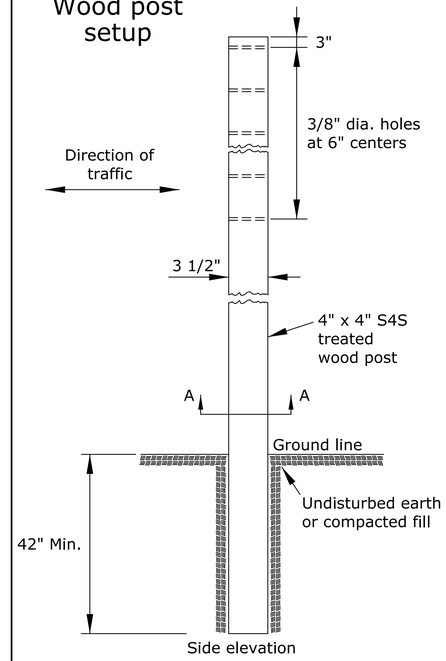

Side elevation

4" x 4" Wood post in soil

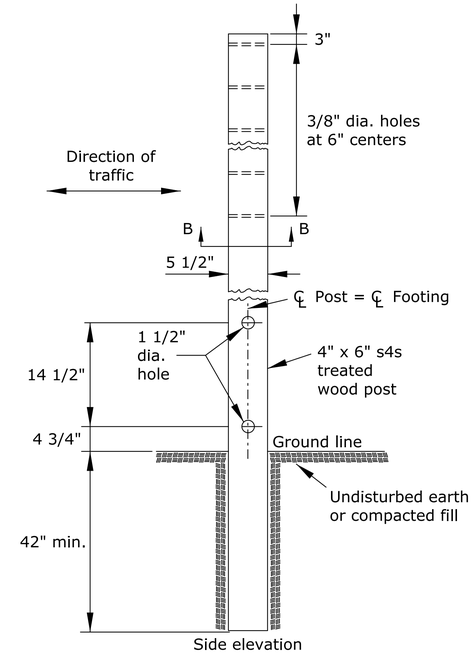

Side elevation

4" x 6" Wood post in soil

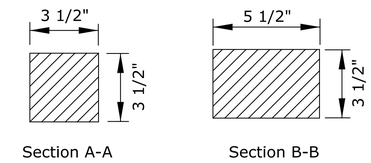

Section A-A

Section B-B

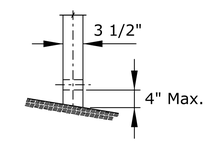

Front elevation

See TE710 for additional details and requirements

3 lb/f U-Channel setup

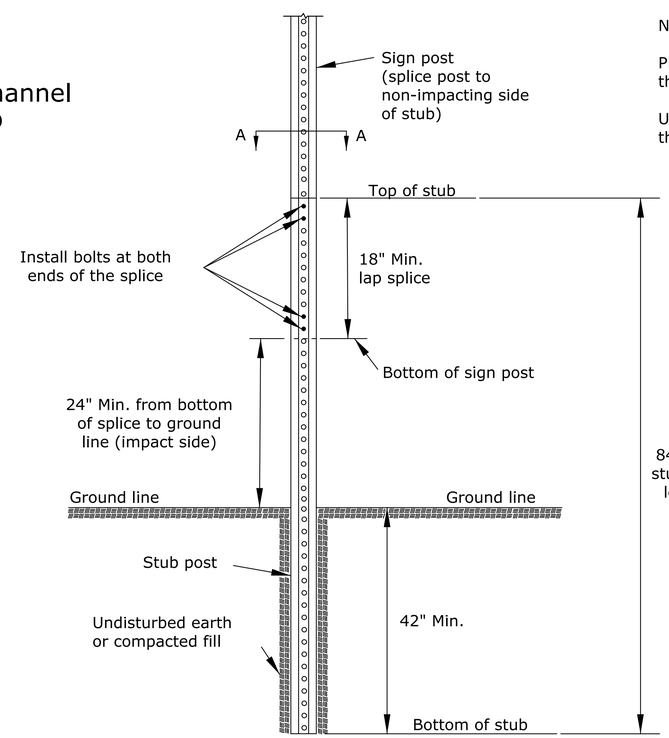

Notes:

Place two bolts at both ends of the splice through the holes nearest the ends of the splice.

Use manufacturer recommended spacers over the bolts between the spliced pieces of U-Channel.

Section A-A

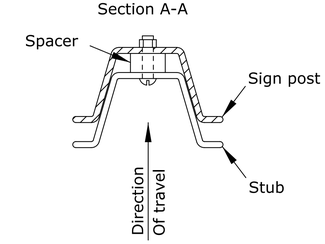

NO.	DATE	REVISIONS	BY	APP'D
3				
2				
1				

KANSAS DEPARTMENT OF TRANSPORTATION

TRAFFIC CONTROL SIGN POSTS

TE712

FHWA APPROVAL			06/01/15	APP'D	Kristina Pyle		
DESIGNED	B.A.H.	DETAILED	R.W.B.	QUANTITIES		TRACED	
DESIGN CK.		DETAIL CK.		QUAN. CK.		TRACE CK.	

KDOT Graphics Certified 06-01-2015

Sh. No. 58

KDOT Graphics Certified

Plotted : 21-JUL-2015 13:38

Drawn By : bblizzard

File : te712.dgn

STATE	PROJECT NO.	YEAR	SHEET NO.	TOTAL SHEETS
KANSAS	52 C-4611-01	2015	59	64

Summary Of Traffic Control Devices (Each)

Work Zone Sign (Special)		
Sign No.	16.25 Sq.Ft. & Less	16.26 Sq.Ft. & Over

Summary Of Traffic Control Devices (Each Per Day)

✳ Quantity Most Used On The Project At Any One Time

Work Zone Signs ✳			
Sign No.	Size - Sq.Ft.		
	0-9.25	9.26-16.25	16.26 & Over
W20-7		2	
R11-2		2	
R11-3b		1	
W20-3		4	

Barricades ✳	
Type 3 (4' To 12')	Pedestrian
8	

Channelizing Devices ✳		
Fixed	Portable	Pedestrian

Lighted Devices ✳	
Work Zone Warning Light (Type "A" Low Intensity)	
Work Zone Warning Light (Red Type "B" High Intensity)	
Arrow Display	
Portable Changeable Message Sign	

Recapitulation Of Quantities		
Item	Quantity	Unit
Work Zone Signs (O To 9.25 Sq.Ft.)		Each Per Day
Work Zone Signs (9.26 To 16.25 Sq.Ft.)		Each Per Day
Work Zone Signs (16.26 Sq.Ft. & Over)		Each Per Day
Work Zone Barricades (Type 3 - 4' To 12')		Each Per Day
Work Zone Barricades (Pedestrian)		Each Per Day
Channelizer (Fixed)		Each Per Day
Channelizer (Portable)		Each Per Day
Channelizer (Pedestrian)		Each Per Day
Work Zone Warning Light (Type "A" Low Intensity)		Each Per Day
Work Zone Warning Light (Red Type "B" High Intensity)		Each Per Day
Arrow Display		Each Per Day
Portable Changeable Message Sign		Each Per Day
Pavement Marking (Temporary)		
4" Solid (Type I)		Sta./Line
4" Solid (Type II)		Sta./Line
4" Broken (8.0') (Type I)		Sta./Line
4" Broken (8.0') (Type II)		Sta./Line
4" Broken (3.0') (Type I)		Sta./Line
4" Broken (3.0') (Type II)		Sta./Line
4" Dotted Extension (Type I)		Sta./Line
4" Dotted Extension (Type II)		Sta./Line
Solid (Line Masking Tape)		Sta./Line
Broken (Line Masking Tape)		Sta./Line
Symbol (Type I)		Each
Symbol (Type II)		Each
Flexible Raised Pavement Marker (4" Broken (8.0'))		Sta./Line
Flexible Raised Pavement Marker (4" Broken (3.0'))		Sta./Line
Pavement Marking Removal		Lin. Ft.
Work Zone Sign (Special) (16.25 Sq. Ft. & Less)		Each
Work Zone Sign (Special) (16.26 Sq. Ft. & More)		Each
Temporary Raised Pavement Marker (Type I)		Each
Temporary Raised Pavement Marker (Type I)		Each
Traffic Signal Installation (Temporary)		Lump Sum
Traffic Control (Initial Set Up)	Lump Sum	Lump Sum
Traffic Control		Lump Sum
Flagger (Set Price)	1	Hour

NO.	DATE	REVISIONS	BY	APP'D
3				
2				
1				

KANSAS DEPARTMENT OF TRANSPORTATION

TRAFFIC CONTROL
SUMMARY OF DEVICES
RECAPITULATION OF QUANTITIES

TE795

FHWA APPROVAL 06/01/15 APP'D Kristina Ericksen

DESIGNED B.A.H. DETAILED R.W.B. QUANTITIES TRACED

DESIGN CK. DETAIL CK. QUAN. CK. TRACE CK.

KDOT Graphics Certified 06-24-2015

KDOT Graphics Certified

Drawn By : bblizzard
File : te795.dgn

Plotted : 21-JUL-2015 13:38

STATE	PROJECT NO.	YEAR	SHEET NO.	TOTAL SHEETS
KANSAS	52 C-4611-01	2015	60	64

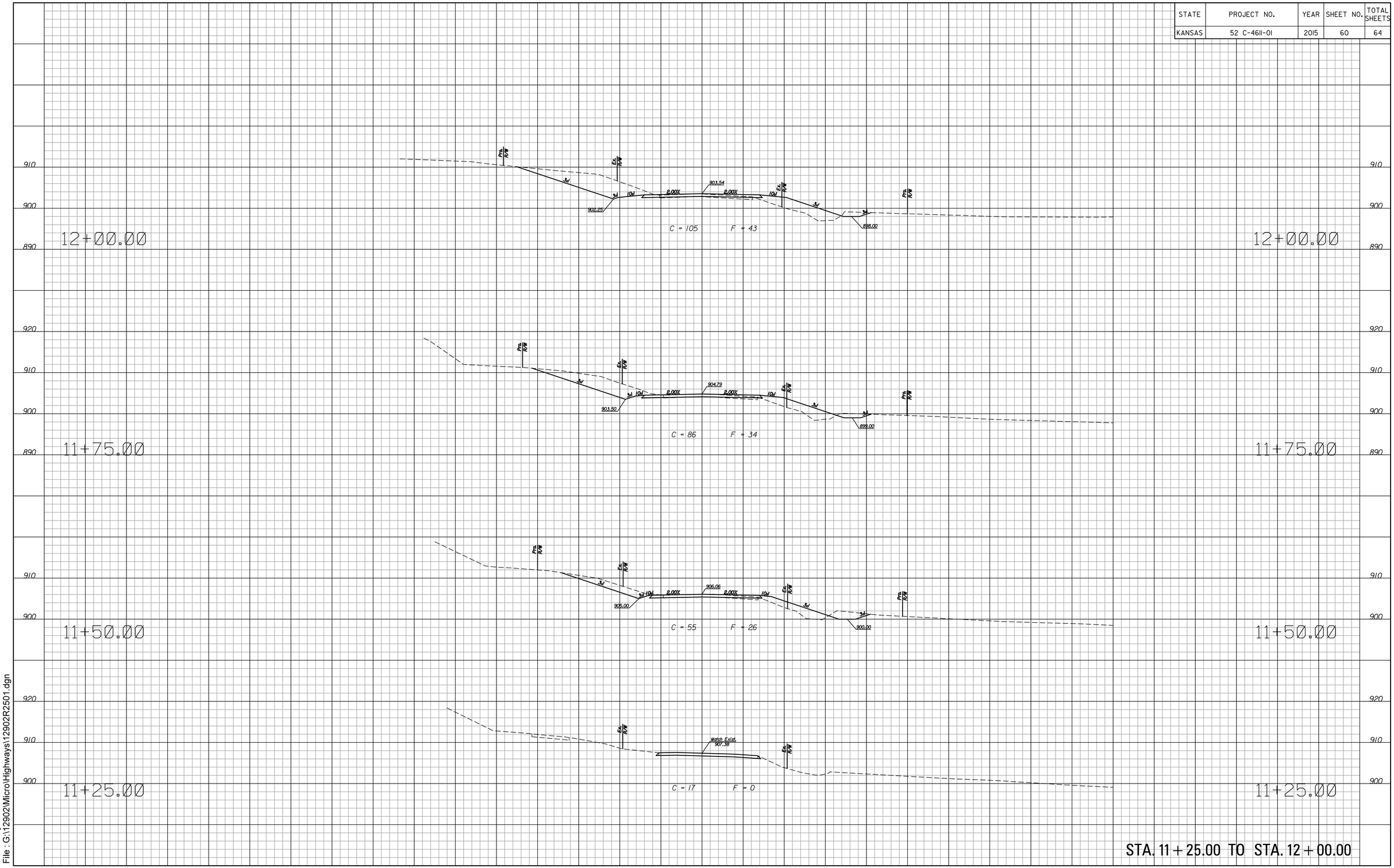

Drawn By : bblizzard
File : G:\12902\MicroHighways\12902R2501.dgn
Plotted : 7/21/2015

STATE	PROJECT NO.	YEAR	SHEET NO.	TOTAL SHEETS
KANSAS	52 C-4611-01	2015	61	64

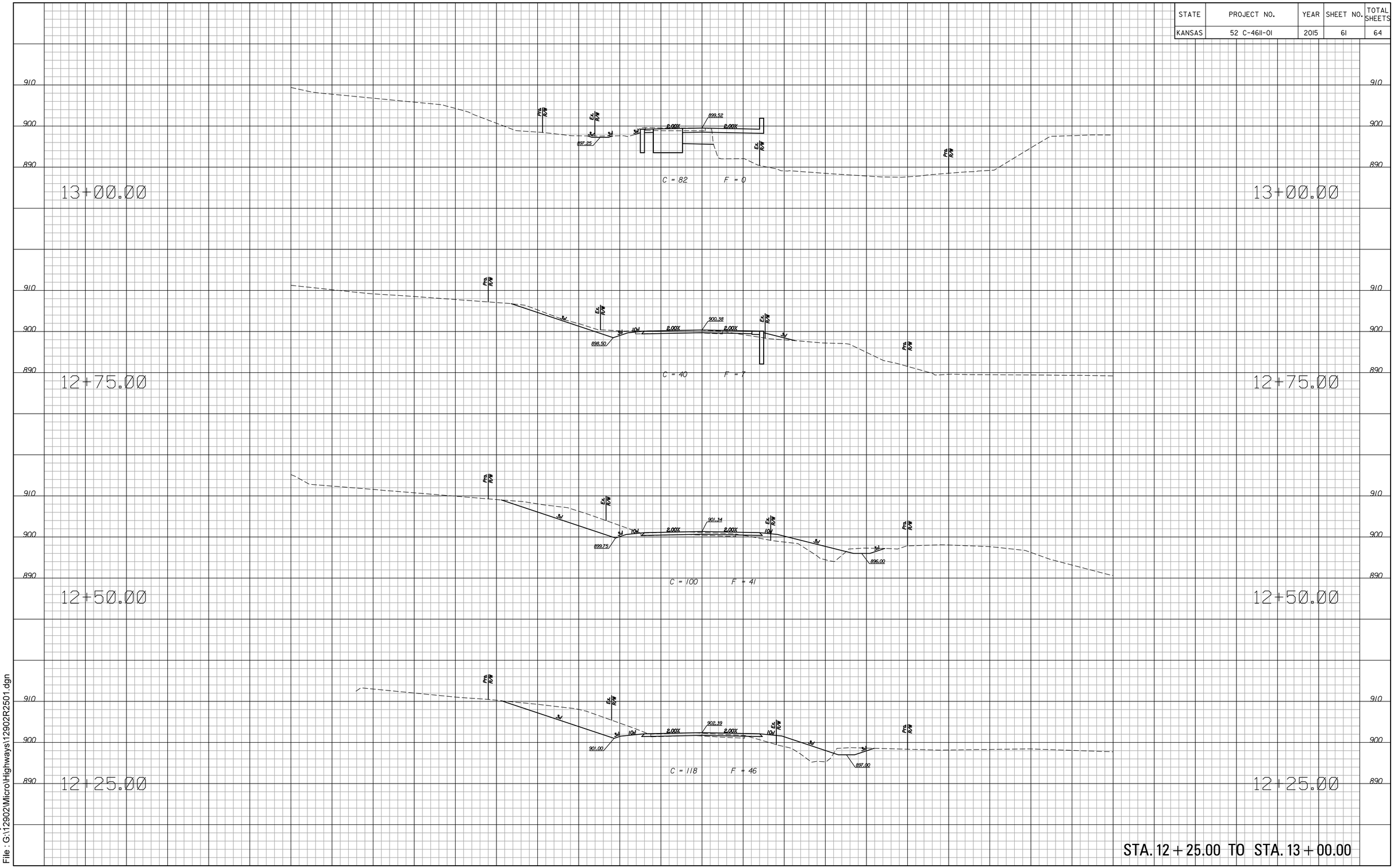

Drawn By : bblizzard
File : G:\12902\MicroHighways\12902R2501.dgn
Plotted : 7/21/2015

STATE	PROJECT NO.	YEAR	SHEET NO.	TOTAL SHEETS
KANSAS	52 C-4611-01	2015	62	64

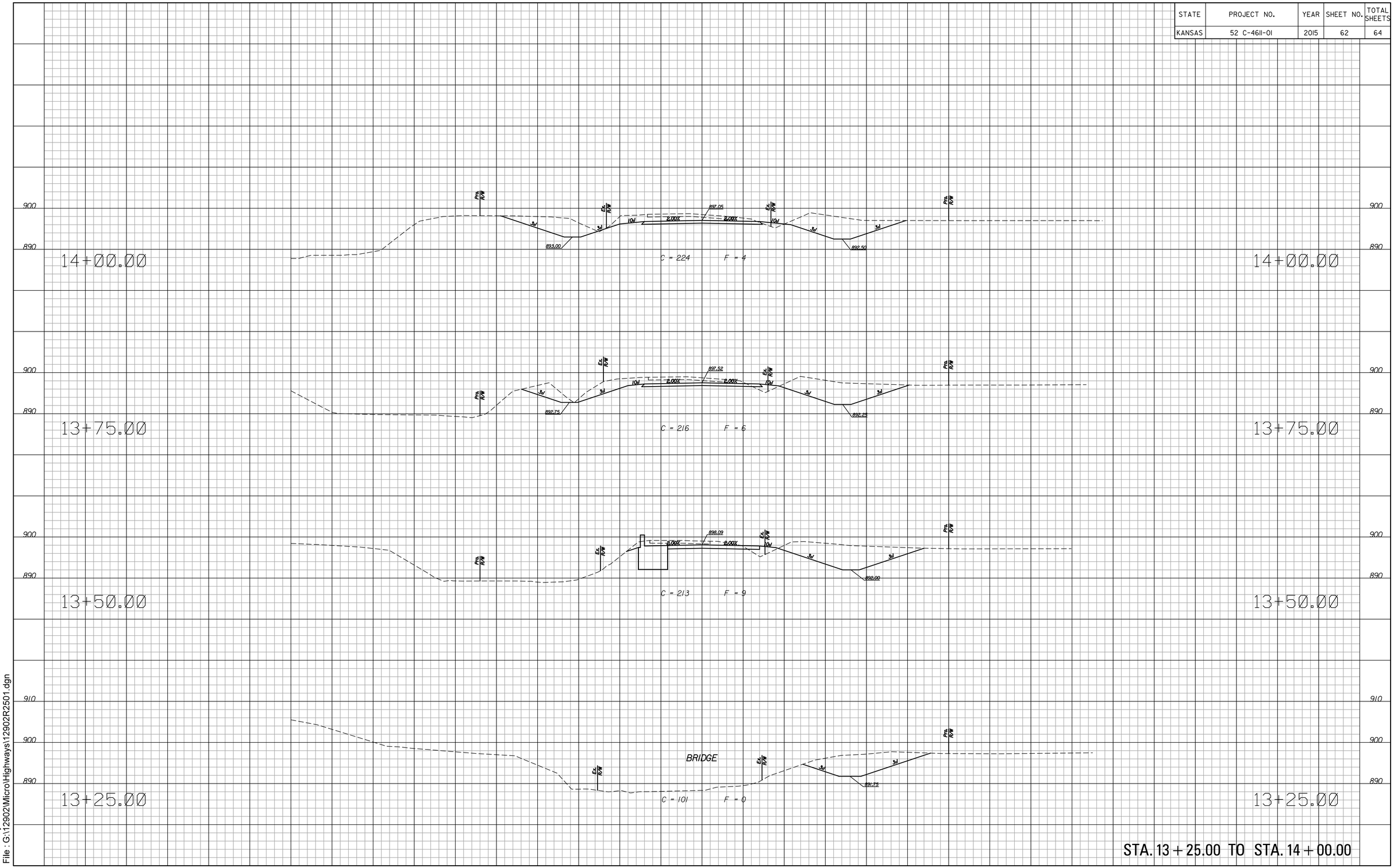

Drawn By : bblizzard
File : G:\12902\MicroHighways\12902R2501.dgn
Plotted : 7/21/2015

STATE	PROJECT NO.	YEAR	SHEET NO.	TOTAL SHEETS
KANSAS	52 C-4611-01	2015	63	64

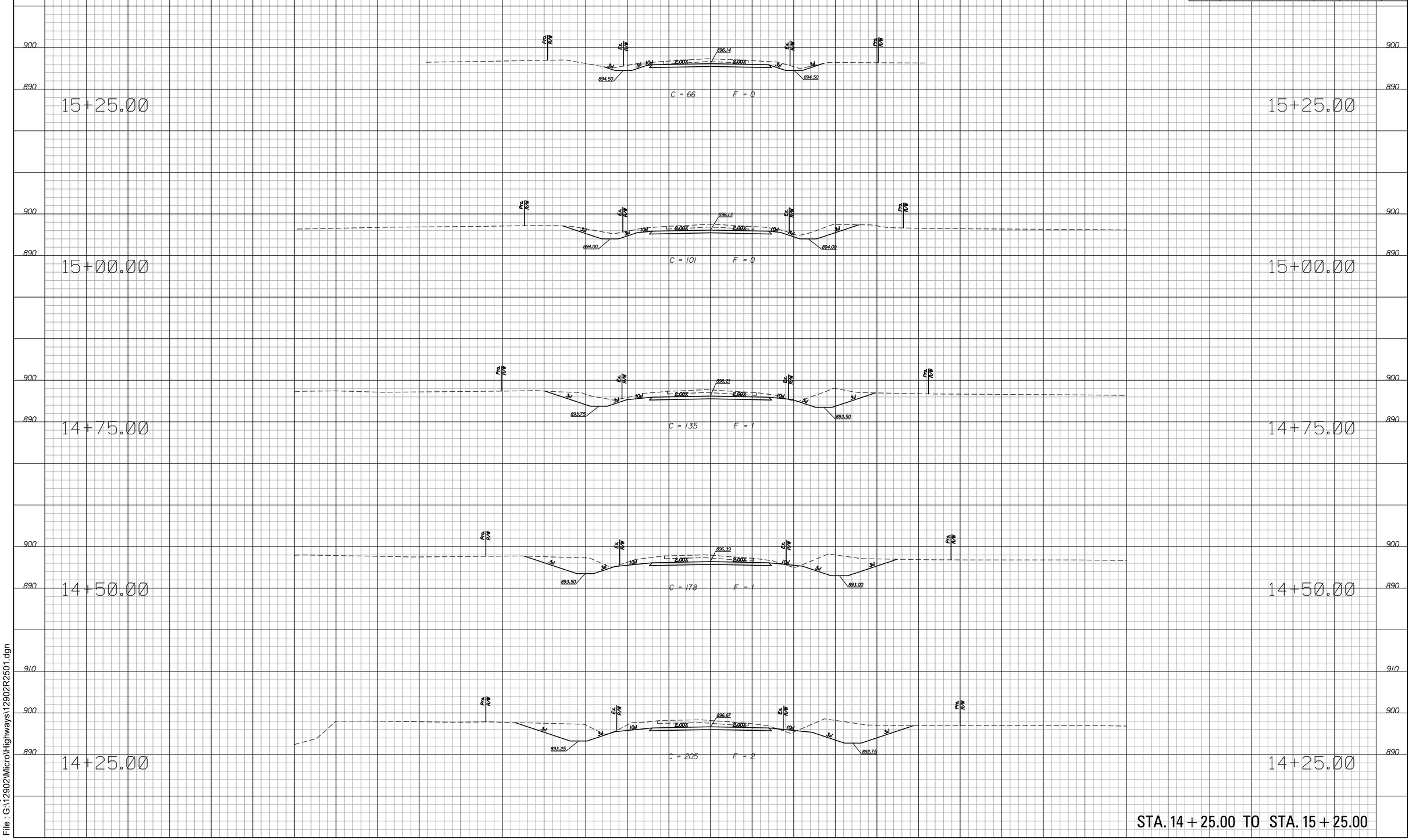

Plotted : 7/21/2015
Drawn By : bblizzard
File : G:\12902\MicroHighways\12902R2501.dgn

STATE	PROJECT NO.	YEAR	SHEET NO.	TOTAL SHEETS
KANSAS	52 C-4611-01	2015	64	64

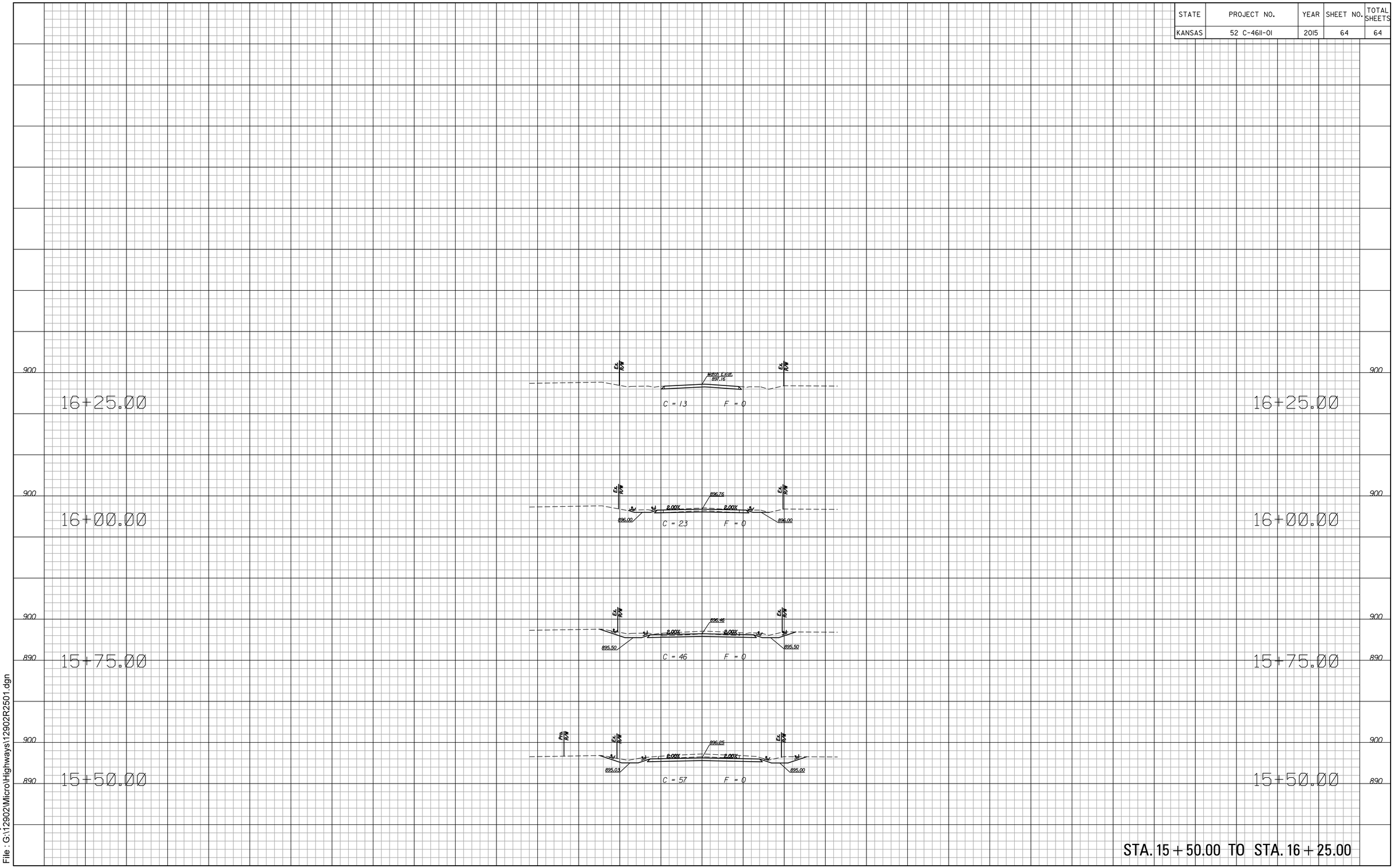

Drawn By : bblizzard
File : G:\12902\MicroHighways\12902R2501.dgn
Plotted : 7/21/2015