FHWA REGION NO.	STATE	PROJECT NO.	YEAR	SHEET NO.	TOTAL SHEETS
7	KANSAS	52 C 3604-01	1999	17	70

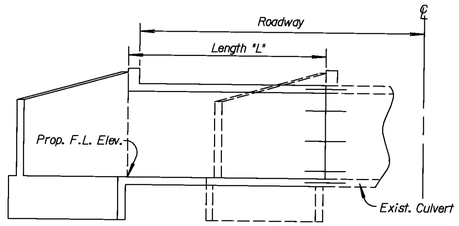

TYPICAL SECTION
(Flared Wings)

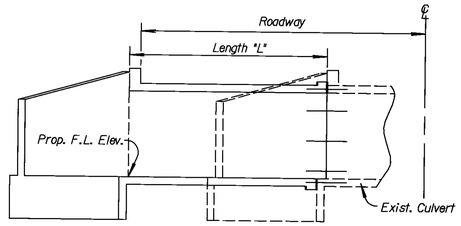

TYPICAL SECTION
(Skewed Structure)

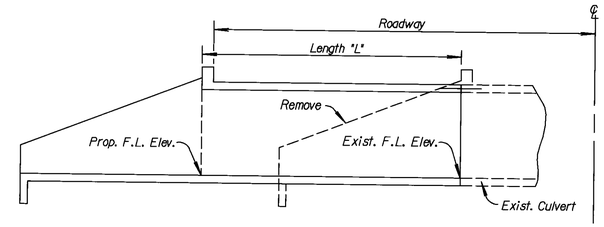

TYPICAL SECTION
(Straight Wings)

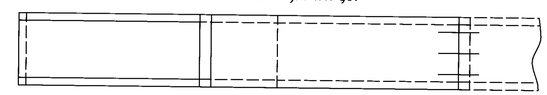

TYPICAL PLAN
(Straight Wings)

GENERAL NOTE

Dimensions of existing structures shall be checked in the field prior to starting the new construction. Interior walls of multiple box extensions need not be the same thickness as the existing walls.

All existing concrete surfaces adjacent to new concrete shall be thoroughly cleaned by brushing, and soaked with water immediately prior to placing the new concrete.

All work and material necessary for installing the dowel bars shall be subsidiary to the bid item "Reinforcing Steel".

Grouting of bars shall meet the Standard Specifications of the Kansas Department of Transportation.

"s_1" and "f_1" bars shall be placed at one-half normal spacing for the first 460 mm.

Straight Wing Extensions

Remove existing wings and wing aprons. Remove top of hubguard if necessary to clear new construction. A minimum of 610 mm length of the existing wing and floor steel shall be left intact and shall be cleaned and straightened to bond into the new concrete. Dowels (#16 deformed bars) shall be inserted across the top of box as shown in sketch. Butt extensions against existing culvert.

Flared Wing Extensions

Remove top of hubguard, if necessary, to clear new construction. Dowels (#16 deformed bars) shall be drilled and grouted in top, bottom, sides and intermediate walls, as shown in sketch. Butt extensions against existing culvert.

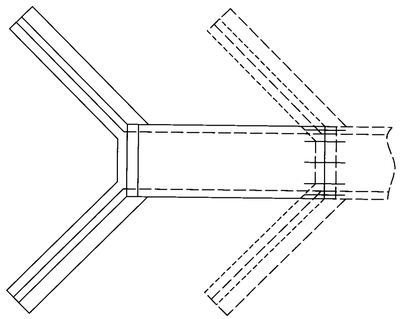

TYPICAL PLAN
(Flared Wings)

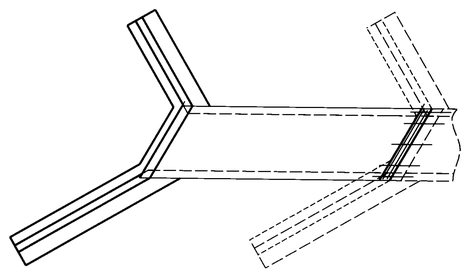

TYPICAL PLAN
(Skewed Structure)

◊ Note: The Joint between the RCB extension and the existing structure shall be protected by a bentonite based system as shown when the following conditions exist:

1. Fill depth over the joint is 600 mm or less.
2. Lateral location of the joint is 6 m or less from edge of pavement.
3. RCB span is equal to or greater than 2.4 m.

The bentonite shall be placed on the exterior walls and top slab and shall conform with the requirements of the Special Provision for "Bridge Backwall Protection System". All materials and labor required for this work shall be Subsidiary to the bid item "Class AAA Concrete".

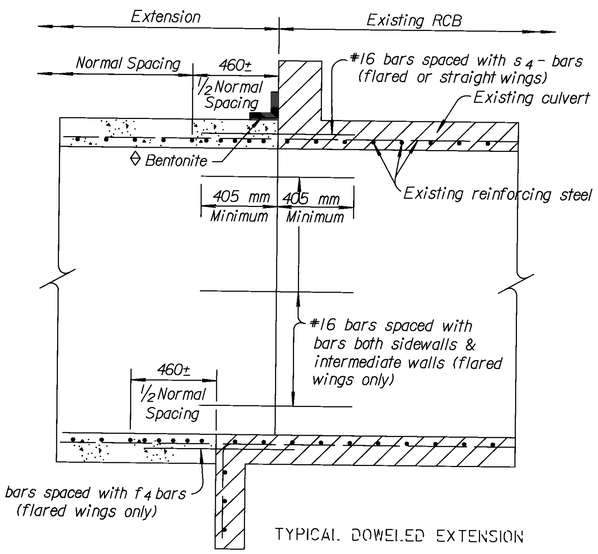

TYPICAL DOWELED EXTENSION

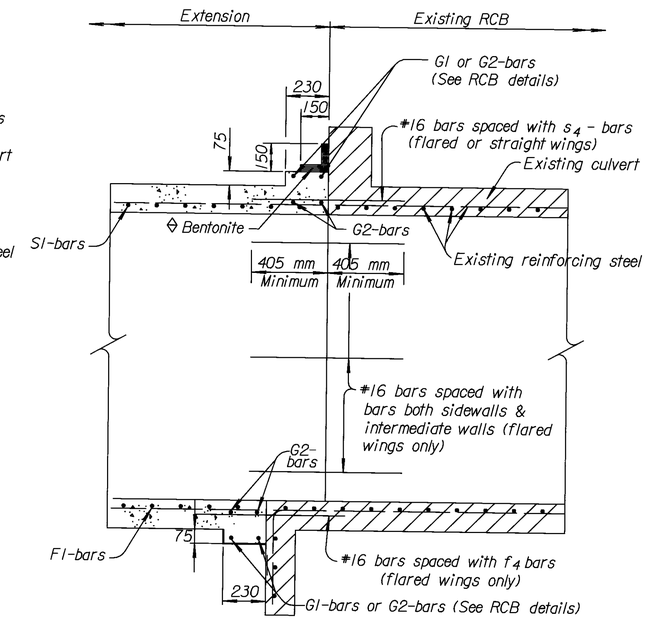

TYPICAL DOWELED EXTENSION
(Skewed Structure)

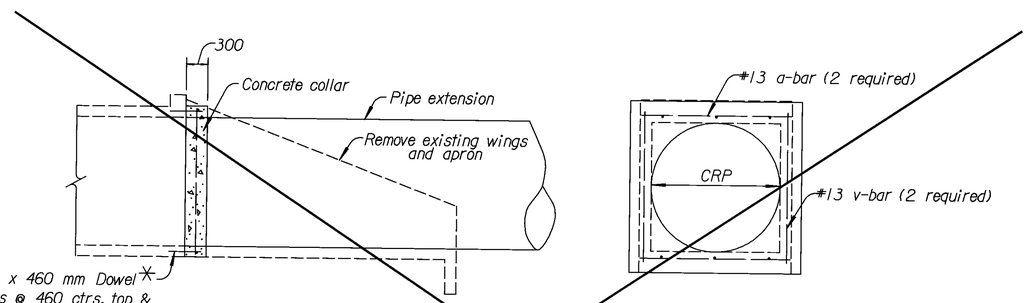

SIDE VIEW

END VIEW

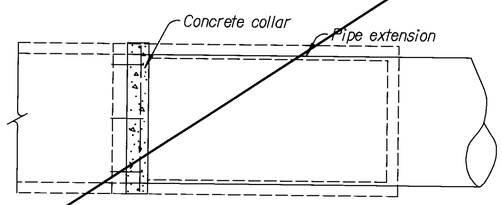

TOP VIEW

CONSTRUCTION OF COLLAR

NOTE: All Labor, Equipment, Materials, and Incidentals necessary to complete the concrete collar shall not be paid for directly but shall be considered Subsidiary to the individual pipe bid item.

Station	Size Exist. R.C.B.	Size C.R.P. Extension	Ext. Length		End Section	
			Lt.	Rt.	Lt.	Rt.

Quantities on this sheet are included in Summary of Quantities, Sh. No. 20

Station	Size Exist. R.C.B.	Roadway		Length "L"		Class AAA Conc. m^3	Reinf. Steel kg	Remarks
		Lt.	Rt.	Lt.	Rt.			
23+906.308	1.525 x 1.220	12.420	19.770	12.600	20.000	22.6	1,000	

NO.	DATE	REVISIONS	BY	APP'D
3				
2	12-15-97	Added bentonite system	R.J.S.	J.O.B.
1	1-27-97	Revised Rebar Designation	R.J.S.	J.O.B.

KANSAS DEPARTMENT OF TRANSPORTATION

TYPICAL CULVERT EXTENSIONS

RD510 S1

FHWA APPROVAL	2-2-98	APP'D. James O. Brewer	
DESIGNED	DETAILED	QUANTITIES	TRACED Bowser
DESIGN CK.	DETAIL CK.	QUAN.CK.	TRACE CK. Seitz

Drawn By : $$USERNAME$$ Plotted : $$$$SYTIME$$$$
File : $$$$$