FHWA REGION NO.	STATE	PROJECT NO.	YEAR	SHEET NO.	TOTAL SHEETS
7	KANSAS	52 C 3604-01	1999	18	70

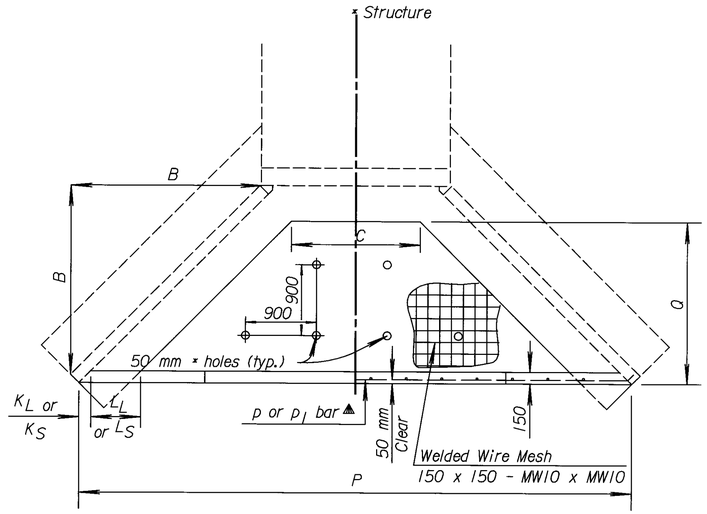

PLAN

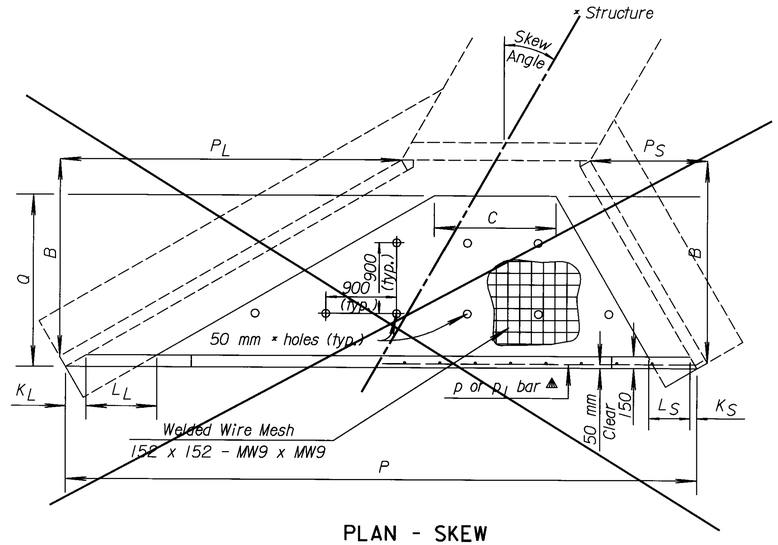

PLAN - SKEW

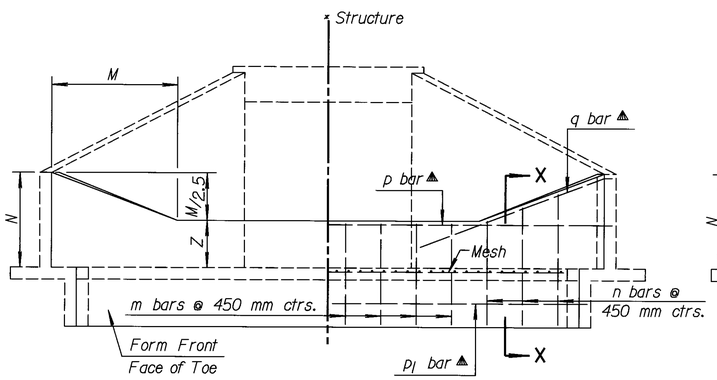

ELEVATION AND SECTION

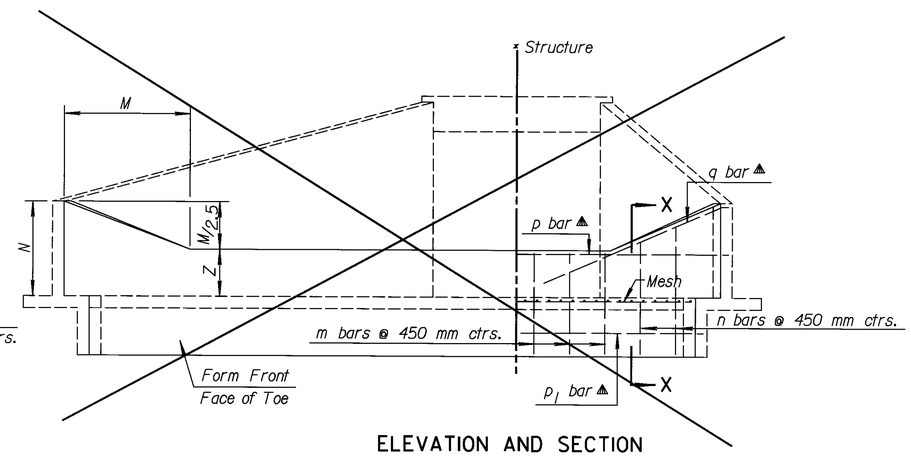

ELEVATION AND SECTION

GENERAL NOTE

CONCRETE: Class AAA Concrete shall be used throughout. All exposed edges shall be finished with an edging tool.

REINFORCING: All dimensions are to ℄ of bar except where noted. All reinforcing bars are #13. Reinforcing bars shall be Grade 420 billet steel. Minimum clearance on all reinforcement shall be 50 mm. Mass of welded wire mesh is approximately 1 kg/m². Mesh shall be paid as kg of reinforcing steel.

When holes in the apron are warranted by drainage conditions they shall be constructed as directed by the Engineer.

▲ Drill and grout p and q bars into wingwalls and p_1 bar into wing footings.

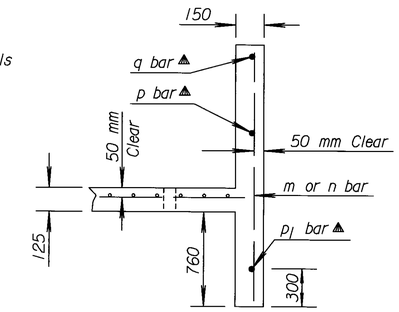

SECTION X-X

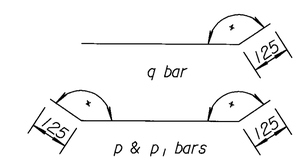

* Angle varies according to skew of RCB. Bars shall be field bent.

BENDING DIAGRAMS

STATION 23+906.308				SIDE Left					Skew 0		Z= 300	
Letter	B	C	K_L	K_S	L_L	L_S	M	N	P	P_L	P_S	Q
Dimension	2 050	1 363	150	- -	431	- -	1 850	1 040	5 665	- -	- -	1 722
Bar	m	n *	p	p_1	q		Mesh					m^2
Number	5	6	1	1	2		Class "AAA" Conc.					0.5 m^3
Length	1 085	1 230	5 765	5 584	3 000		Reinf. steel					31.0 kg

STATION				SIDE					Skew		Z=	
Letter	B	C	K_L	K_S	L_L	L_S	M	N	P	P_L	P_S	Q
Dimension												
Bar	m	n *	p	p_1	q		Mesh					m^2
Number							Class "AAA" Conc.					m^3
Length							Reinf. steel					kg

STATION				SIDE					Skew		Z=	
Letter	B	C	K_L	K_S	L_L	L_S	M	N	P	P_L	P_S	Q
Dimension												
Bar	m	n *	p	p_1	q		Mesh					m^2
Number							Class "AAA" Conc.					m^3
Length							Reinf. steel					kg

STATION				SIDE					Skew		Z=	
Letter	B	C	K_L	K_S	L_L	L_S	M	N	P	P_L	P_S	Q
Dimension												
Bar	m	n *	p	p_1	q		Mesh					m^2
Number							Class "AAA" Conc.					m^3
Length							Reinf. steel					kg

STATION				SIDE					Skew		Z=	
Letter	B	C	K_L	K_S	L_L	L_S	M	N	P	P_L	P_S	Q
Dimension												
Bar	m	n *	p	p_1	q		Mesh					m^2
Number							Class "AAA" Conc.					m^3
Length							Reinf. steel					kg

STATION				SIDE					Skew		Z=	
Letter	B	C	K_L	K_S	L_L	L_S	M	N	P	P_L	P_S	Q
Dimension												
Bar	m	n *	p	p_1	q		Mesh					m^2
Number							Class "AAA" Conc.					m^3
Length							Reinf. steel					kg

Quantities include soil saver end wall only. See wingwall details for apron quantities.

* n bars are variable, increase by increments of 175 mm. Cut 2 each length.

SUMMARY OF SOIL SAVERS

Station	Culvert Size	Side	Z	Skew
23+906.308	1.5 m X 1.2 m	Lt	300	0

NO.	DATE	REVISIONS	BY	APP'D
2				
1	1-27-97	Revised Rebar Designation & Grade	R.J.S.	J.O.B.

KANSAS DEPARTMENT OF TRANSPORTATION

SOIL SAVER FOR R.C. CULVERTS

RD520 SI

FHWA APPROVAL	2-18-97	APP'D. James O. Brewer	
DESIGNED	DETAILED	QUANTITIES	TRACED Bowser
DESIGN CK.	DETAIL CK.	QUAN.CK.	TRACE CK. Seitz

Note to the Designer: See the appropriate culvert standard drawings for the required dimensions and angles.

Drawn By: $$USERNAME$$ Plotted: $$$$$$SYTIME$$$$$$
File: $$$$$$$$$$$$$$$$DGNSPEC$$$$$$$$$$$$$$$$