FHWA REGION NO.	STATE	PROJECT NO.	YEAR	SHEET NO.	TOTAL SHEETS
7	KANSAS	52 C 3604-01	1999	2	70

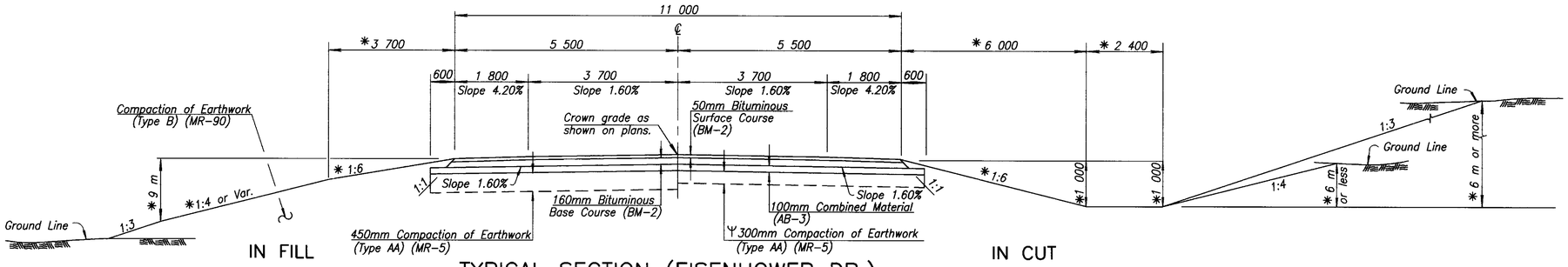

TYPICAL SECTION (EISENHOWER DR.)

Sta. 10+000.000 to 10+101.534

Ψ The lower 150 mm of compaction is subsidiary.

* Dimensions and slopes for standard ditches and fills. See plan and cross-sections for variations.

Note: Intersection of all slope lines shall be softened and rounded for pleasing appearance.

Ditch Plugs within the appropriate clear zone shall have side slopes of 1:8 or flatter.

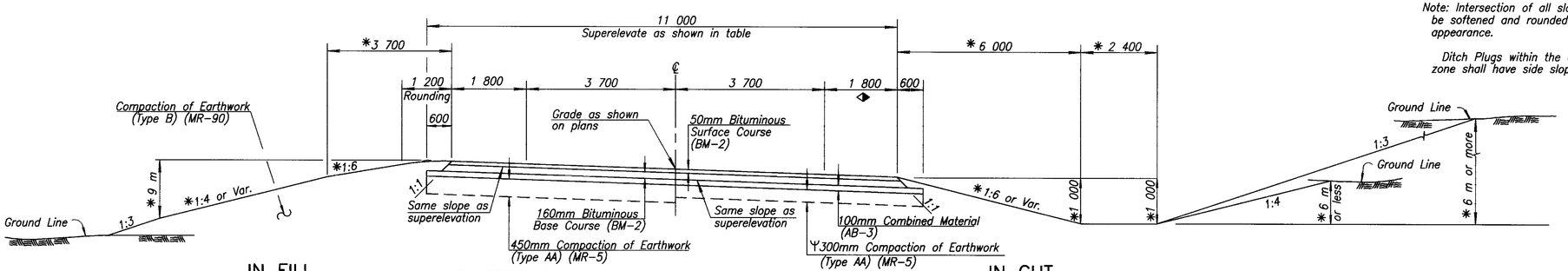

SUPERELEVATED SECTION (EISENHOWER DR.)

Sta. 10+000.000 to 10+101.534

Ψ The lower 150 mm of compaction is subsidiary.

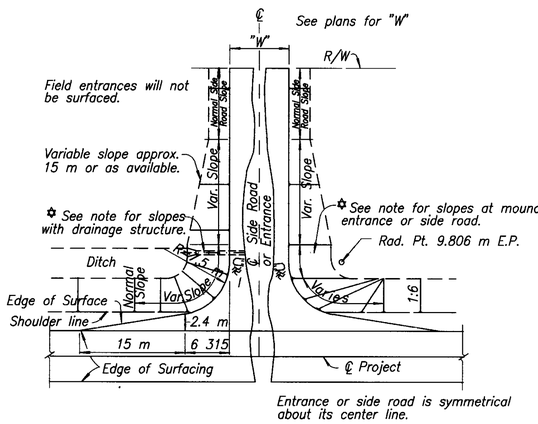

FLARE OF SHOULDERS AT ENTRANCES AND SIDE ROADS

≈ Note: On side roads and entrances which slope toward the highway, a low point approx. 150 mm deep shall be constructed to divert surface drainage into the highway ditch, unless otherwise shown on the plans.

✡ Dimensions for mound entrances or sideroads and those with drainage structures shall be similar with the exception of side slopes within the project clear zone. These slopes shall be as follows:

Normal Slope (but not steeper than 1:6 at approximate ℄ of structure or appropriate clear zone width for entrances or sideroads containing drainage structures.

1:8 Slope at the appropriate clear zone shall apply to all mound entrances and mound side roads to 3 m fill height. Normal Slope (but not steeper than 1:4) over 3 m fill height.

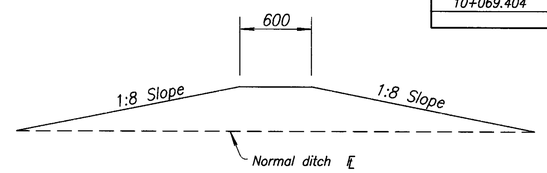

SKETCH OF DITCH PLUG

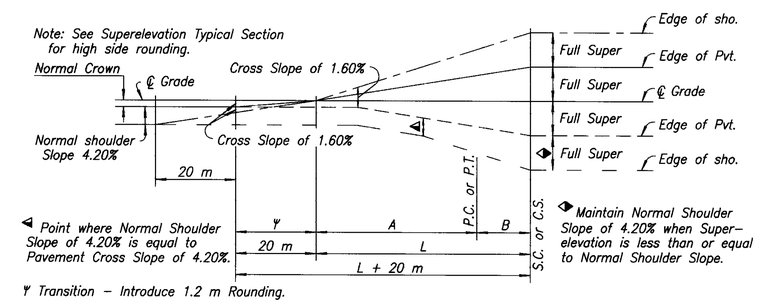

PROFILE SHOWING METHOD OF ATTAINING SUPERELEVATION

Sta. P.I. Curve	Curve Radius	km/h	Super %	Transition		
				L	A	B
10+069.404	45.0	30	3.0	27.0	18.0	9.0

PROFESSIONAL ENGINEERING CONSULTANTS, P.A.
1263 S.W. TOPEKA BLVD.
TOPEKA, KANSAS 66612-1852
PH (785) 233-8306 FAX (785) 233-8855

KANSAS DEPARTMENT OF TRANSPORTATION

TYPICAL SECTIONS
GRADING & SURFACING
EISENHOWER DR. (County Route # 10)

F:\199819806B\dwg\Eisen-TYP.dwg Wed Jul 21 11 42 03 1999 JSL_Pallette_B
EISEN-TYP(A)