FHWA REGION NO.	STATE	PROJECT NO.	YEAR	SHEET NO.	TOTAL SHEETS
7	KANSAS	52 C 3604-01	1999	4	70

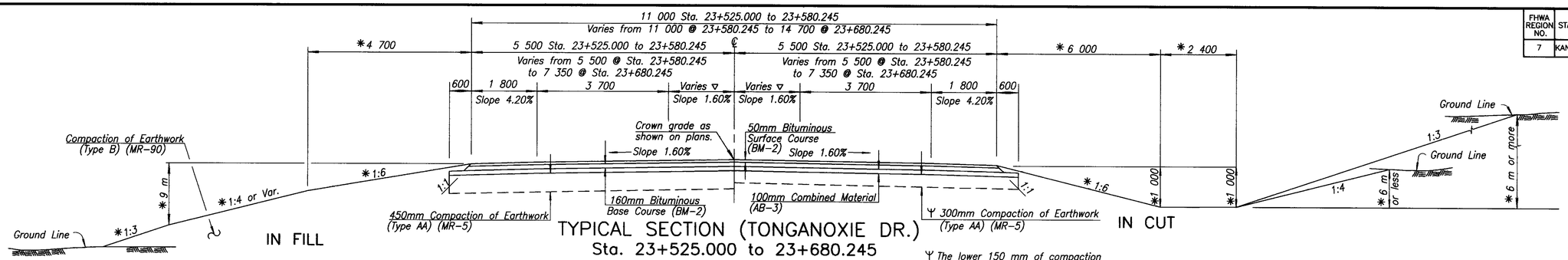

TYPICAL SECTION (TONGANOXIE DR.)
Sta. 23+525.000 to 23+680.245

Ψ The lower 150 mm of compaction is subsidiary.

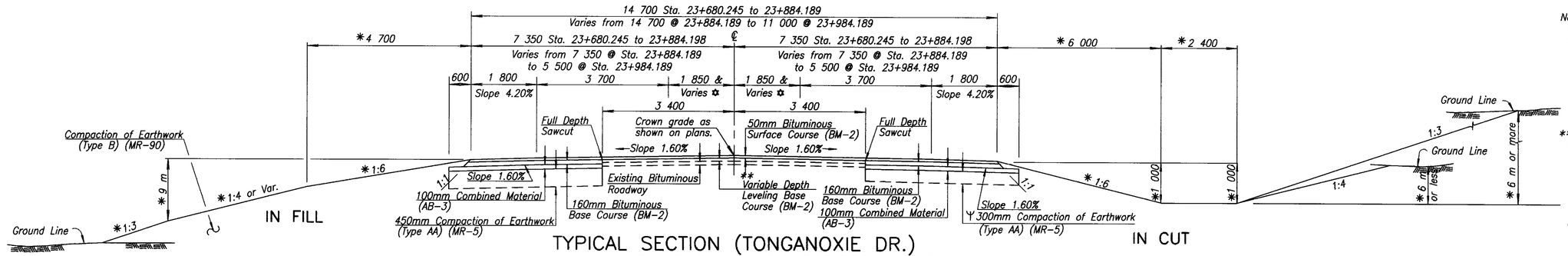

TYPICAL SECTION (TONGANOXIE DR.)
Sta. 23+680.245 to 24+010.000

Ψ The lower 150 mm of compaction is subsidiary.

* Dimensions and slopes for standard ditches and fills. See plan and cross-sections for variations.

Note: Intersection of all slope lines shall be softened and rounded for pleasing appearance.

Ditch Plugs within the appropriate clear zone shall have side slopes of 1:8 or flatter.

** Leveling course shall have a 25 mm minimum thickness.

▽ 0 000 from Sta. 23+525.000 to 23+580.245 Varies from 0 000 at Sta. 23+580.225 to 1 850 at Sta. 23+680.245

✡ 1 850 from Sta. 23+680.245 to 23+884.189 Varies from 1 850 at Sta. 23+884.189 to 0 000 at Sta. 23+984.189

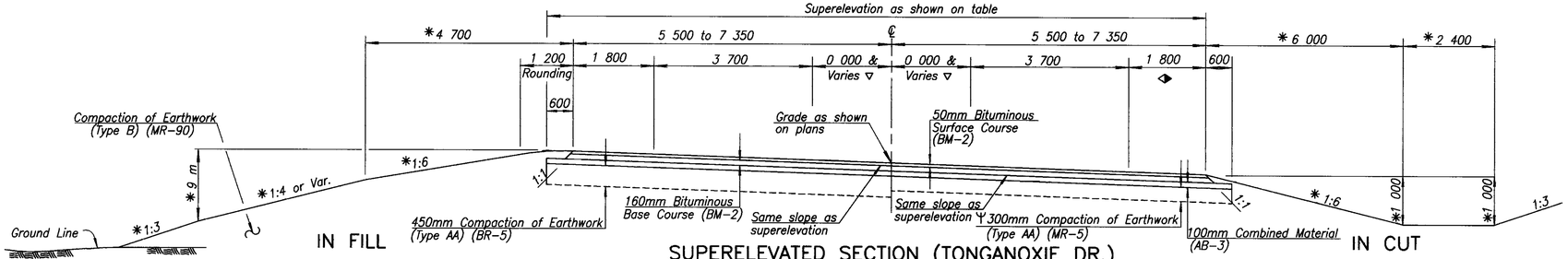

SUPERELEVATED SECTION (TONGANOXIE DR.)
Sta. 23+525.000 to 23+680.245

▽ Varies from 0 000 at Sta. 23+580.225 to 1 850 at Sta. 23+680.245

Ψ The lower 150 mm of compaction is subsidiary.

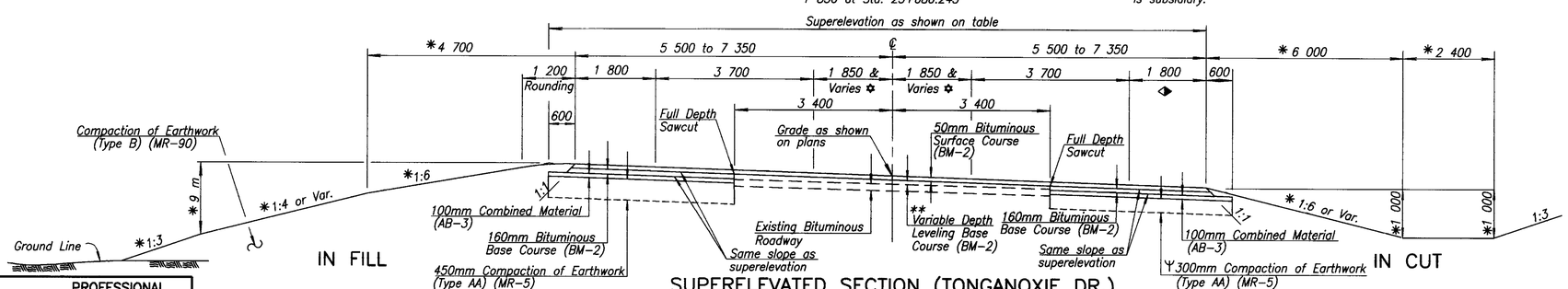

SUPERELEVATED SECTION (TONGANOXIE DR.)
Sta. 23+680.245 to 24+010.000

✡ Varies from 1 850 at Sta. 23+884.189 to 0 000 at Sta 23+984.189
From Sta. 23+755.000 to Sta 23+792.000, Full Depth Sawcut at ℄

Ψ The lower 150 mm of compaction is subsidiary.

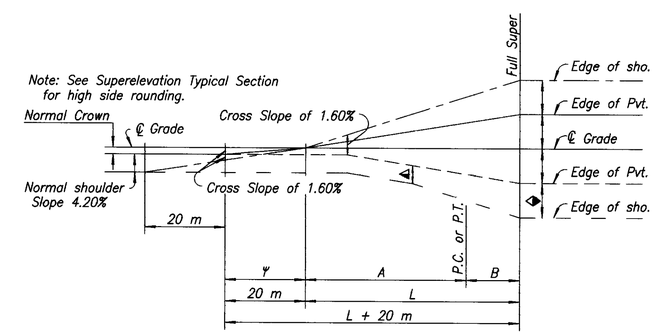

◄ Point where Normal Shoulder Slope of 4.20% is equal to Pavement Cross Slope of 4.20%.

◆ Maintain Normal Shoulder Slope of 4.20% when Superelevation is less than or equal to Normal Shoulder Slope.

Ψ Transition – Introduce 1.2 m Rounding.

PROFILE SHOWING METHOD OF ATTAINING SUPERELEVATION

Sta. P.I. Curve	Curve Radius	km/h	Super %	Transition		
				L	A	B
23+700.807	438.781	90.0	7.2	55.0	36.667	18.333

PROFESSIONAL ENGINEERING CONSULTANTS, P.A.
1263 S.W. TOPEKA BLVD.
TOPEKA, KANSAS 66612-1852
PH (785) 233-8300 FAX (785) 233-8855

KANSAS DEPARTMENT OF TRANSPORTATION
TYPICAL SECTIONS
GRADING & SURFACING
TONGANOXIE DR. (County Route #5)

TONG-TYP
F:\1998\98058\dwg\long-TYP.dwg Wed Jul 21 11:43:45 1999 JSL_Pallette_B