STATE	PROJECT NO.	YEAR	SHEET NO.	TOTAL SHEETS
KANSAS	52 U-1785-01	2003	101	143

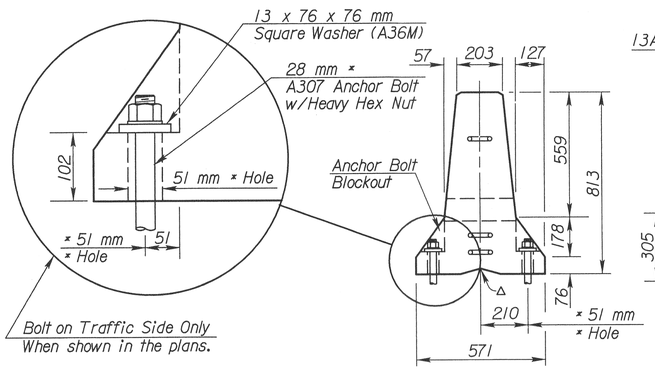

END VIEW

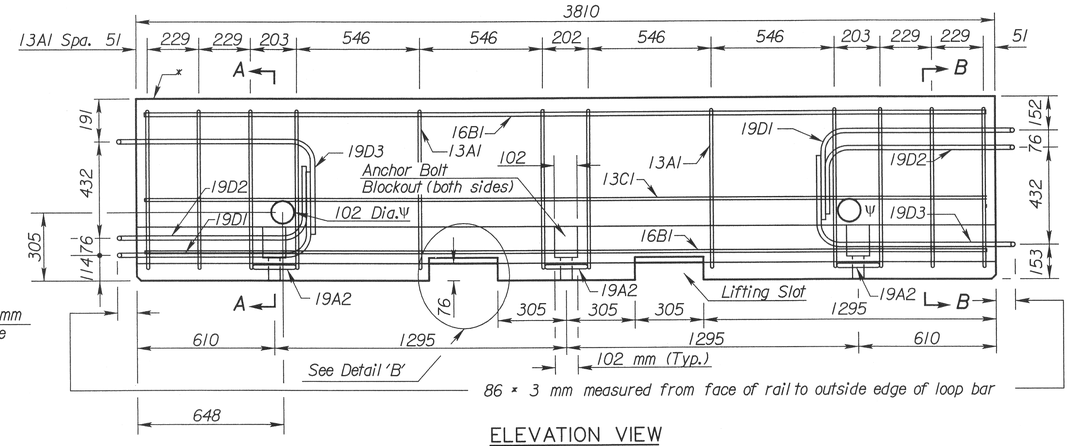

ELEVATION VIEW

⁎ Marked End

Ψ 102 mm diameter - 3 mm steel round mechanical tubing sleeve. These holes are optional.

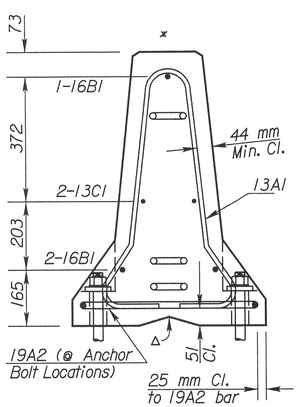

SECTION A-A
TYPICAL SECTION

(Stirrup Placement)

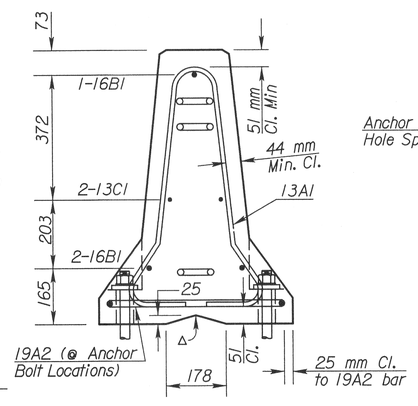

SECTION B-B
TYPICAL SECTION

(Stirrup Placement)

△— V Notch is optional

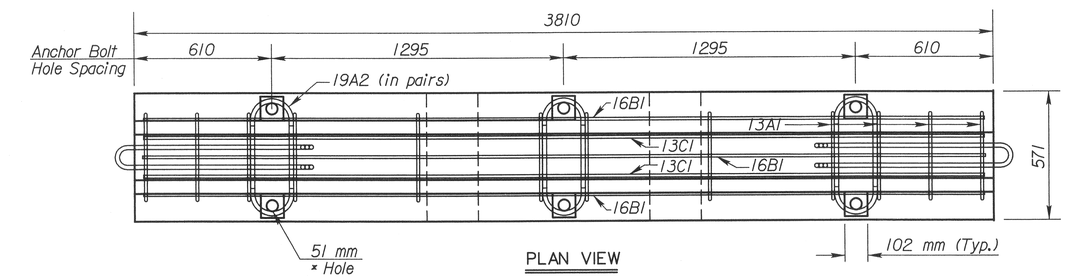

PLAN VIEW

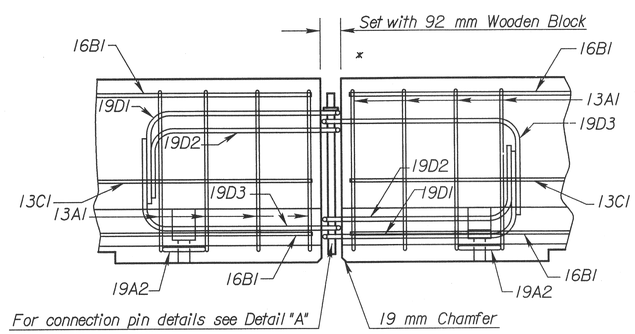

DETAILS OF BARRIER CONNECTION

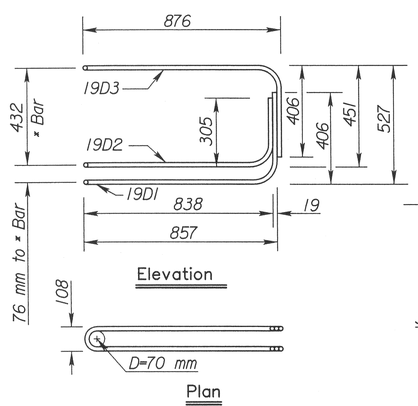

Elevation

Plan

LOOP BAR ASSEMBLY

(Marked end shown, invert for other end)

(Material as stated in General Notes)

(Dimensions are out to out of bars unless otherwise noted.)

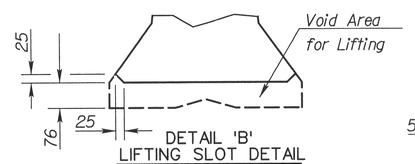

DETAIL 'B'
LIFTING SLOT DETAIL

(25 mm Chamfer to prevent spalling)

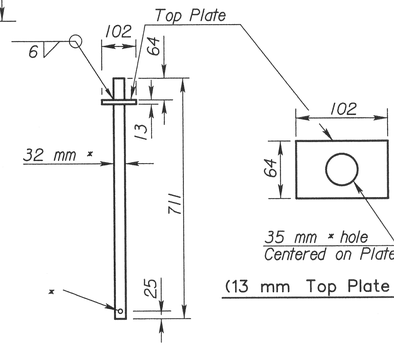

DETAIL A
CONNECTION PIN (e1)

(A36M Steel) 4.9 kg.each

(13 mm Top Plate Detail)

⁎ 10 mm hole and retainer bolt at Contractors option.

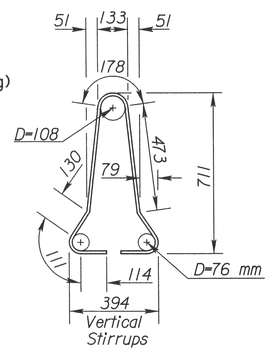

13A1

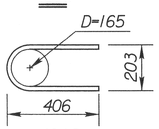

19A2

GENERAL NOTES:

MATERIAL: Use ASTM A615M, Grade 420 reinforcing bars, except for the loop bars (19D1, 19D2 and 19D3).

The loop bars (19D1, 19D2 and 19D3) shall be 19 mm smooth steel bars with a minimum yield of 420 MPa, a tensile strength of not less than 1.25 times the yield strength but a minimum of 550 MPa, a minimum 14% elongation in 203 mm, and passing a 180 degree bend test using a 3.5D pin bend diameter. The loops shall be installed within 3 mm of the plan dimensions.

Use Concrete Grade 35 (AE) throughout.

Use 28 mm ⁎ A307 Anchor Bolts with heavy hex nut & washer (A36M). Use ASTM A36M material for the Connection Pin.

SECTION: The section furnished must generally comply with dimensions shown. Requests for minor variations in section geometry and attachments may be submitted to the Engineer for approval.

LIFTING SLOTS: Lifting slots shall be constructed where specified on the plans to facilitate the drainage of water after installation on the roadway.

TEMPORARY CONCRETE SAFETY BARRIER: Furnishing and placing of all materials when required and all labor and equipment required to position the temporary barrier shall be included in the Contract unit price bid for "Concrete Safety Barrier (Type F3)(Temporary)". Any relocation of the barrier required for the project shall be paid in accordance with the Special Provisions under the bid item "Concrete Safety Barrier (Type F3)(Temporary-Relocate)". Unless otherwise noted on the Plans, the Temporary Concrete Safety Barrier shall become the property of the Contractor and shall be removed from the site upon acceptance of the completed project. Approximate weight of one unit equals 2.45 Mg.

SURFACE PREPARATION: Barrier shall be placed on a paved surface. All loose dirt and sand shall be removed from the roadway surface just prior to placement of the barrier.

DELINEATION: See Standard Drawing RD640 SI for delineator notes and details.

MARKING: The left end (⁎) of each barrier shall be permanently marked by stamping or forming into the barrier the following information:

- Type F3
- Manufacturer code (as specified by KDOT Bureau of Const. & Maint.)
- Date manufactured (month and year)

At no time shall the barriers be lifted, moved, etc by use of the loop bars: 19D1, 19D2 or 19D3.

Per 3810 mm Barrier Section

REINFORCING A615M Gr. 420					
Bar	Bar Size	Shape	No. of Bars	Length mm	Weight kg
13A1	13		12	1834	21.9
19A2	19		6	898	12.0
16B1	16		3	3708	17.3
13C1	13		2	3708	7.4
LOOP ASSEMBLY					
19D1	19		2	2565	11.5
19D2	19		2	2311	10.3
19D3	19		2	2591	11.6

Concrete Quantity = 1.0 m³

NO.	DATE	REVISIONS	BY	APP'D
3				
2				
1				

KANSAS DEPARTMENT OF TRANSPORTATION

TEMPORARY
CONCRETE SAFETY BARRIER
TYPE F3

RD642 SI

FHWA APPROVAL	9-25-02	APP'D James O. Brewer	
DESIGNED	DETAILED	QUANTITIES	CADD M.R.R.
DESIGN CK.	DETAIL CK.	QUAN. CK.	CADD CK.

	BY	DATE
REFERENCES NOTED	W. Adams	9-01
REFERENCES CHECKED	R. Stegman	11-01

Plotted : 4/6/2004
Drawn By : rstegman
Section : $$$$KDOTGRP$$$$
File : p:\01541\01541 rd642si.dgn