STATE	PROJECT NO.	YEAR	SHEET NO.	TOTAL SHEETS
KANSAS	52 U-1785-01	2003	23	143

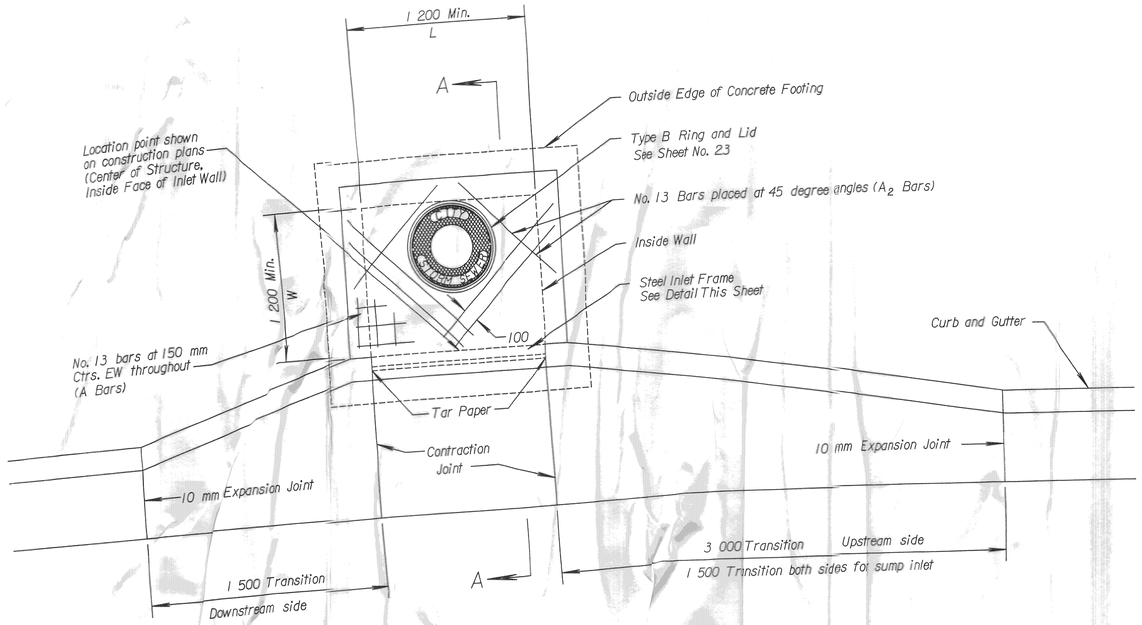

PLAN

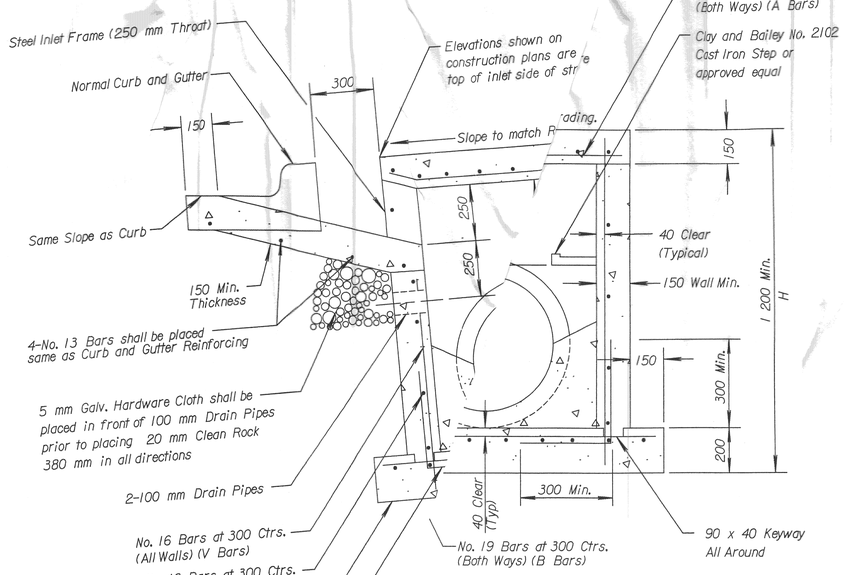

SECTION A-A

CURB INLET
Not to Scale

NOTE: See Schedule of Inlets and Manholes for Individual Inlet Dimensions
For Inlets Exceeding 2 700 H (Height), Wall Reinforcement (V, H and C Bars) Shall be No. 19 Bars.

CURB INLET NOTES:

1. Use Grade 25 Concrete (AE) throughout.
2. The first dimension listed in the construction notes is the "L" dimension. The second dimension is the "W" dimension.
3. Floor of inlet shall be shaped with non-reinforced Grade 25 Concrete (AE) invert to provide smooth flow.
4. Expansion joints shall be either hot or cold poured joint sealing compound, or premolded expansion joint filler.
5. Steel inlet frame spacers shall be placed at equal spacings not to exceed 1.2 m.
6. Cast iron steps to be Clay & Bailey 2102 or approved equal. Steel core, plastic coated steps may be used (M.A. Ind., Inc. No. PSI-PF, PS2-PF, or approved equal). Cast iron steps shall be spaced at 406 mm O.C. vertically. The distance from the last step to the top of concrete invert should be a maximum of 610 mm.
7. Bevel all exposed edges with 20 mm triangular molding.
8. On-grade inlets shall conform to the street grade and sump inlets shall be level.
9. All storm sewer structures shall be precast or poured in place. If precast structures are used, the tops shall be poured in place and the wall steel shall be left exposed to a height 50 mm below the finish top elevation, or as directed by the Engineer. Precast shop drawings are to be approved by the Engineer.
10. All concrete used in this work shall meet the applicable requirements of Standard Specifications for State Road and Bridge Construction, Kansas Department of Transportation, latest edition, and KDOT Special Provisions.
11. Reinforcing steel shall be new billet, minimum Grade 300 as per ASTM A615M, and shall be bent cold.
12. All dimensions relative to reinforcing steel are to centerline of bars. 40 mm clearance shall be provided throughout unless noted otherwise. Tolerance of +/- 3 mm shall be permitted.
13. All lap splices not shown shall be a minimum of 40 bar diameters in length.
14. All dowels shall be accurately placed and securely tied in place prior to placement of bottom slab concrete. Sticking of dowels into fresh or partially hardened concrete will not be acceptable.
15. All reinforcing steel shall be supported on fabricated steel bar supports @ 900 mm maximum spacing.
16. Do not scale these drawings for dimensions or clearances. Any questions regarding dimensions shall be brought to the attention of the Engineer prior to construction.
17. The bottom slab shall be at least 24 hours old before placing sidewall concrete. All sidewall forms shall remain in place a minimum of 24 hours after sidewalls are poured before removal, and after removal shall be immediately treated with membrane curing compound.
18. On thoroughfare construction all curb inlet tops are to be constructed after final curb string line has been approved by the Engineer and prior to curb construction.

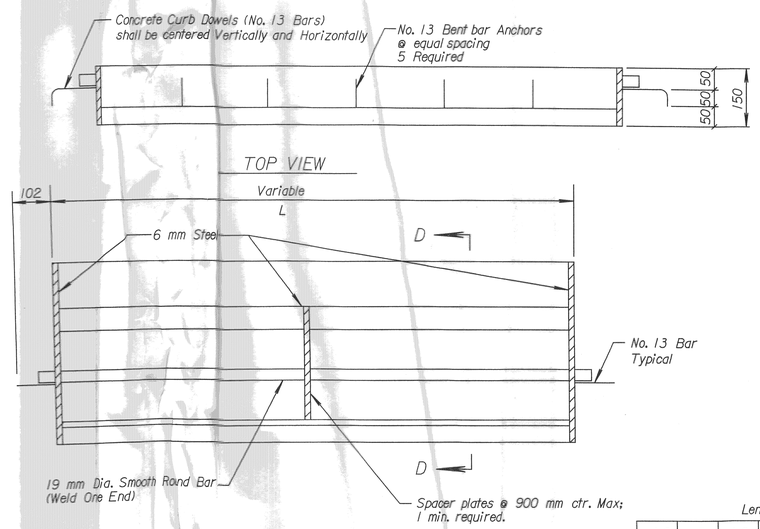

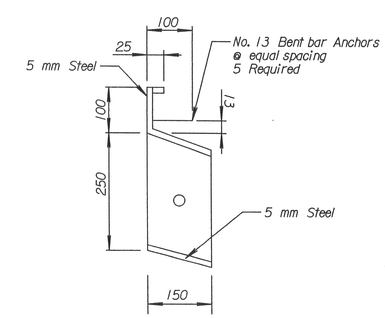

Length (m)						
1.2	1.5	1.8	2.1	2.4	2.7	3.0
42	51	60	68	76	84	94
Weight (kg.)						

STEEL INLET FRAME
Not to Scale

STEEL INLET FRAME NOTES:

MATERIAL:
A. FORMED TOP CHANNEL SHALL BE FABRICATED FROM A 0.15 MAX., CARBON, FORMING QUALITY OR A36 HOT ROLLED STEEL PLATE.
B. ALL FLAT PLATE & ROUND RODS SHALL BE OF M1020 MERCHANT QUALITY OR A36 HOT ROLLED STEEL.
C. ALL MATERIAL SHALL BE FREE FROM RUST & MILL SCALE.

WELDING:
A. ALL WELDING SHALL BE PERFORMED IN ACCORDANCE WITH APPROPRIATE AWS SPECIFICATIONS AND PROCEDURES.
B. ALL WELDS ON EXPOSED SURFACES SHALL BE DRESSED SO AS TO PROVIDE A PLEASING FINISHED SURFACE.

PAINT:
THE ENTIRE FRAME SHALL BE GALVANIZED PER ASTM A123.

KANSAS DEPARTMENT OF TRANSPORTATION

CURB INLET DETAILS

DATE	BY	
9-01	M Adams	
11-01	R Stegman	

REFERENCES NOTED
REFERENCES CHECKED

Drafted : 4/6/2004 | Section : $$$KDOTGRP$$$$
Drawn By : rstegman
File : p:\0154\01541 Curb Inlet.dgn