STATE	PROJECT NO.	YEAR	SHEET NO.	TOTAL SHEETS
KANSAS	52 U-1785-01	2003	3	143

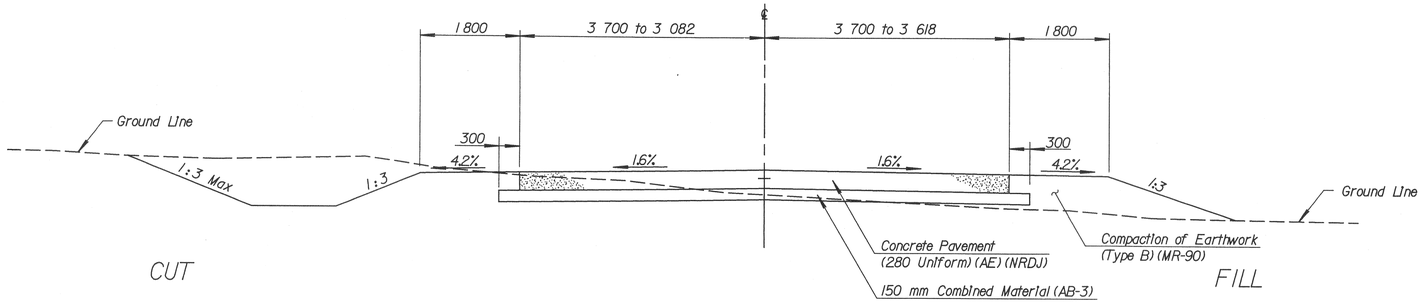

Typical Section - Side Road

5+026.026 to 5+093.000 (155th Street)

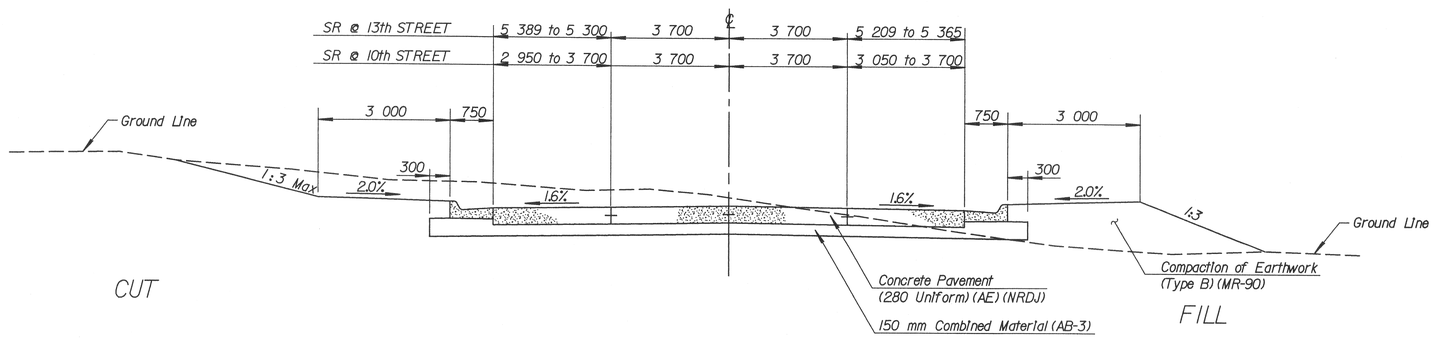

Typical Section - Side Road

4+944.000 to 4+972.345 (13th Street)
4+945.000 to 4+974.128 (10th Street)

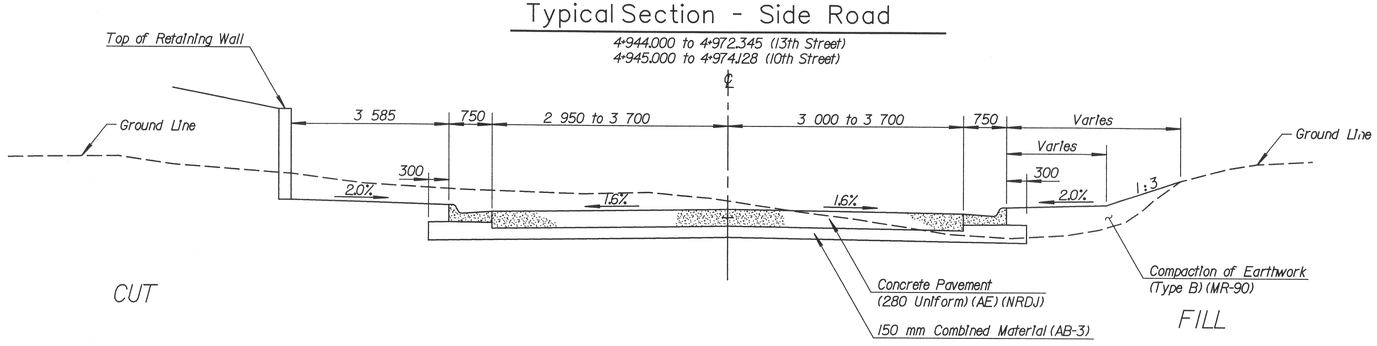

Typical Section - Side Road

5+014.300 to 5+098.000 (Mt. Calvary Road)

REFERENCES NOTED	BY	DATE
REFERENCES CHECKED	JWARD	4-03

Plotted : 4/6/2004
Drawn By : rstegman
File : p:\0154\0154 typical section mainline 02.dgn
Section : $$$$KDOTGRP$$$$

Cook, Flatt & Strobel
ENGINEERS, P.A.

KANSAS DEPARTMENT OF TRANSPORTATION

TYPICAL SECTIONS
EISENHOWER ROAD