STATE	PROJECT NO.	YEAR	SHEET NO.	TOTAL SHEETS
KANSAS	52 U-1785-01	2003	33	143

NOTE: E.F. Indicates each face.
N.F. Indicates near face.
F.F. Indicates far face.

GENERAL STRUCTURAL NOTES

1. The structural design was prepared using the following data:

   (A) Design Stresses
   Concrete $f'c$ = 30 MPa
   Reinforcing Steel fy = 420 MPa

   (B) Foundations
   Assumed Allowable Soil Pressure :
   Type "A" = 125 KPa
   Type "B" = 105 KPa
   Type "C" = 75 KPa
   Type "D" = 60 KPa

2. Bevel all exposed edges with a 20 mm triangular molding, unless otherwise noted.
3. All bar hooks are standard unless otherwise noted.
4. Minimum depth to bottom of footing is 900 mm below final grade.

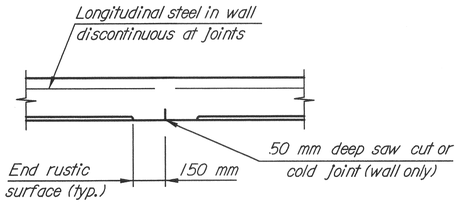

CONTRACTION JOINT DETAIL

Not to Scale
(Normal spacing of CJ's=7.5 m)

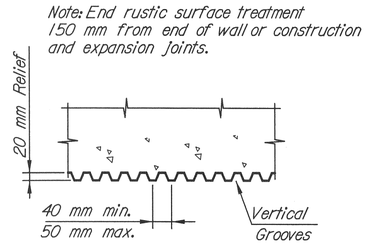

SURFACE TREATMENT DETAIL

Not to Scale

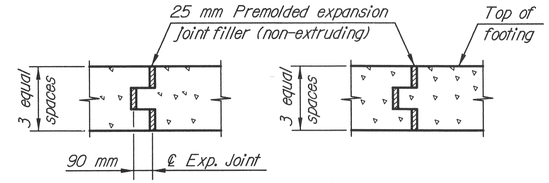

WALL SECTION FOOTING ELEVATION

Expansion Joints shall be required at the locations shown on the layout sheet. The Joint shall be continuous through the wall and footing. All longitudinal steel shall be discontinuous at Joints.

EXPANSION JOINT DETAILS

Not to Scale
(Max. spacing of EJ's=30 m)

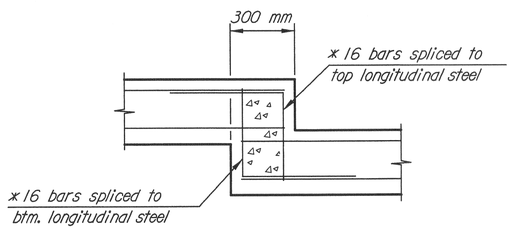

FOOTING STEP DETAIL

Not to Scale

* Indicates Bar Size

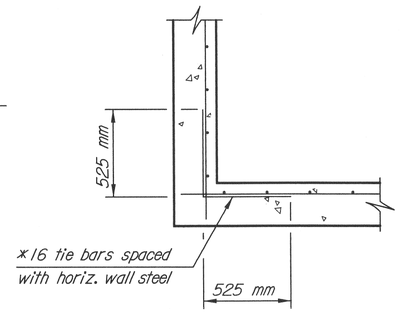

WALL CORNER TIE DETAIL

Not to Scale

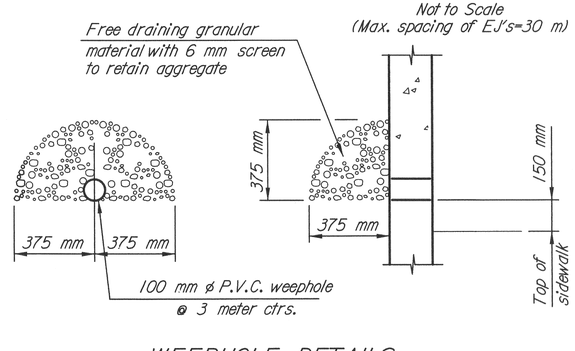

WEEPHOLE DETAILS

Not to Scale

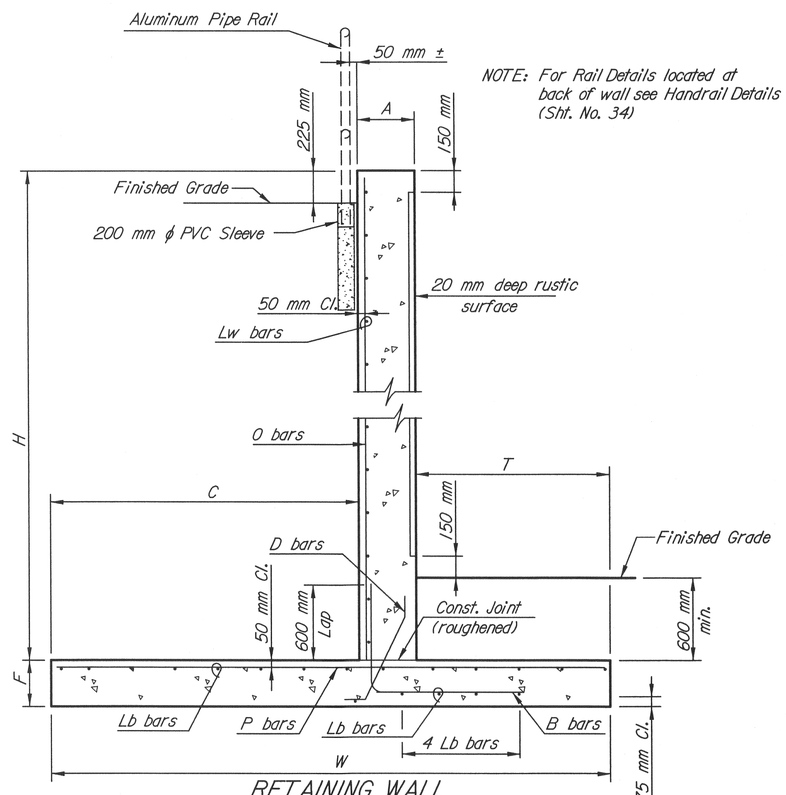

NOTE: For Rail Details located at back of wall see Handrail Details (Sht. No. 34)

RETAINING WALL

Sta. 5+020 to Sta. 5+072 Lt.
Mt Calvary Road
Not to Scale

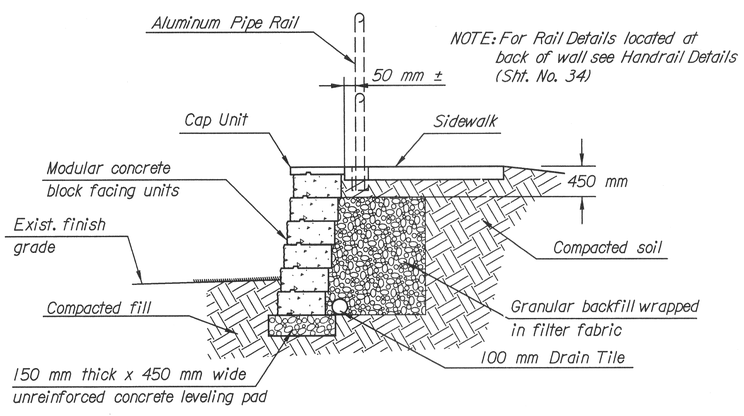

NOTE: For Rail Details located at back of wall see Handrail Details (Sht. No. 34)

Note:
Block wall shall be Mesa System from Tensar Earth Technologies or approved equal. The contractor shall submit shop drawings for each wall sealed by a Professional Engineer licensed in the State of Kansas

MODULAR BLOCK WALL TYPICAL SECTION

Sat. 4+325 to Sta. 4+347 Rt.
Sta. 4+465 to Sta. 4+480 Rt.
Sta. 4+645 to Sta. 4+752 Rt.
Not to Scale

NOTE: The Engineer for the Modular Block Wall shall verify that soils can withstand the footing pressures shown.

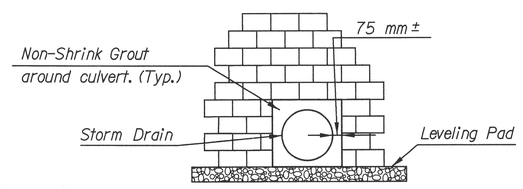

PIPE OUTLET THROUGH MODULAR BLOCK WALL

Not to Scale

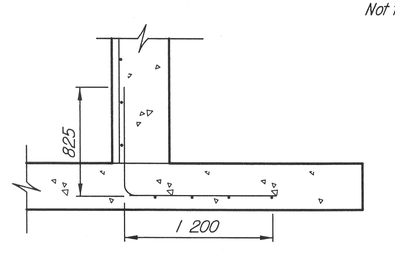

B BAR BENDING DIAGRAM

Not to Scale

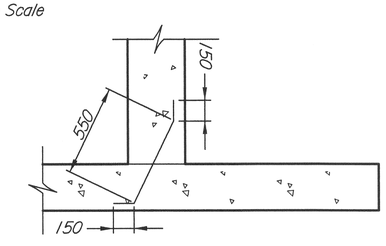

D BAR BENDING DIAGRAM

Not to Scale

TYPE	H	A	F	W	C	T	O bars		B bars		D bars		Lb bars		P bars		Lw bars	
	mm	mm	mm	mm	mm	mm	Size	Spac.	Size	Spac.	Size	Spac.	Size	Spac.	Size	Spac.	Size	Spac.
A	>3000	350	375	3700	2400	950	19	150	19	150	19	150	19	300	19	150	19	150
B	>2400 <3000	300	300	3600	1500	800	19	300	19	300	19	300	19	300	19	300	19	300
C	>1800 <2400	300	300	2200	1200	700	19	300	19	300	19	300	19	300	19	300	19	300
D	<1800	200	300	1600	900	500	19	300	19	300	19	300	19	300	19	300	19	300

KANSAS DEPARTMENT OF TRANSPORTATION

RETAINING WALL DETAILS

DATE	BY	
9-01	M Adams	REFERENCES NOTED
11-01	R. Stegman	REFERENCES CHECKED

Plotted : 4/16/2004 | Section : $$$$KDOTGRP$$$$
Drawn By : rstegman
File : p:\0154\10154\ Retaining Wall Detail.dgn