STATE	PROJECT NO.	YEAR	SHEET NO.	TOTAL SHEETS
KANSAS	52 U-1785-01	2003	39	143

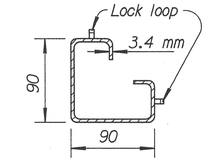

End, corner, gate, or pull post
7.22 kg/m. (Std.)
(For gate widths 1.8 m to 4 m use 13.56 kg/m. post, O.D. 100 mm)

TYPE II POST

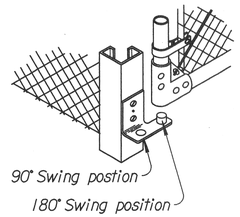

HINGE DETAIL

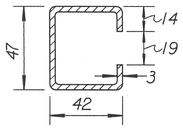

LINE POST (C)
3.39 kg/m

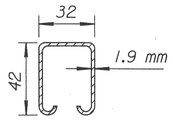

BRACE RAIL SECTION

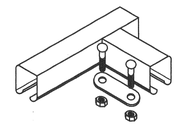

CORNER CONNECTOR
for BRACE RAILS

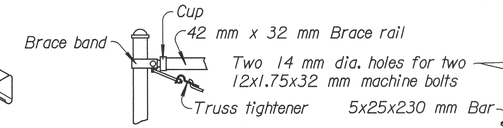

BRACE & TRUSS CONNECTION
at BRACE POST

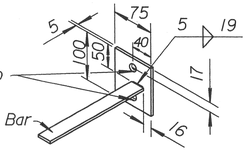

END POST TORQUE BAR

ALTERNATE CHAIN LINK DETAILS

GENERAL NOTE

A line post shall be used at each cross fence, and the contractor shall make a temporary connection. This work shall be subsidiary to other bid items.

In general, where needed, use small channel crossing as shown. Type I and Type II Floodgates will be used very seldom.

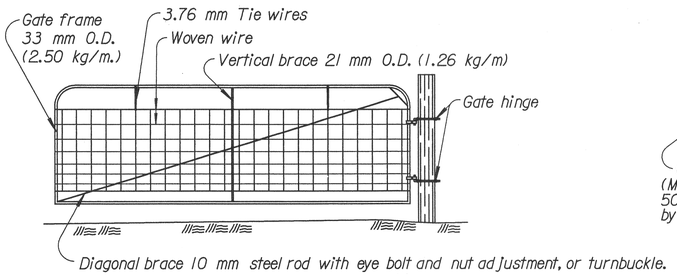

DETAIL of GATE
(for Barbed & Woven Fence)

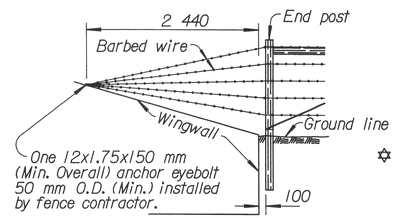

FENCE DETAILS
AT DRAINAGE STRUCTURES
(Type A, B, or barbed wire fence.)

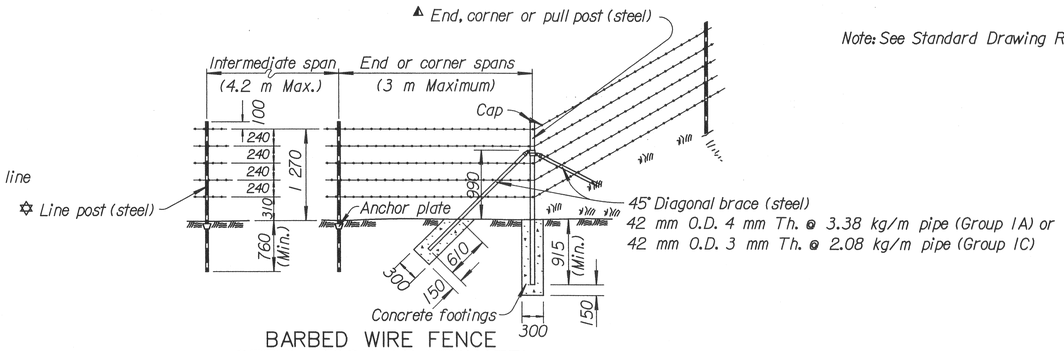

Note: See Standard Drawing RD525 SI for steel post requirements.

BARBED WIRE FENCE
STEEL POST (ALTERNATE)
Steel posts may be used in lieu of wood posts as shown above.

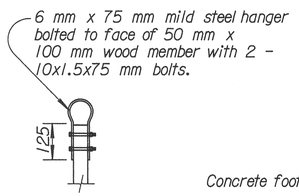

FLOODGATE
HANGER DETAIL

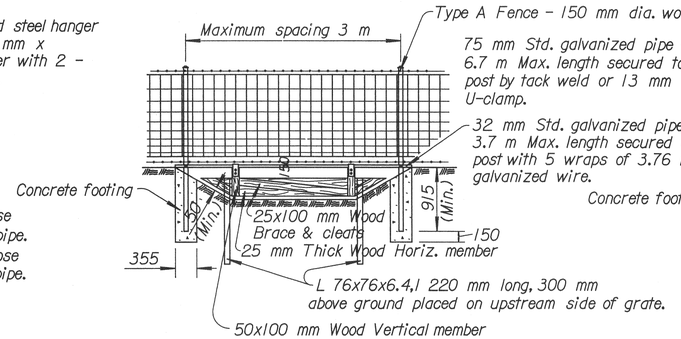

TYPE I FLOODGATE

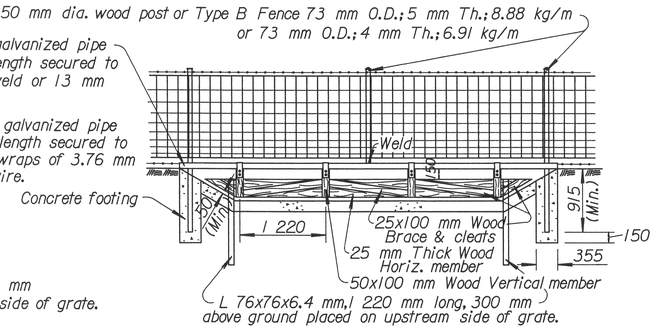

TYPE II FLOODGATE
(Grouted stone or concrete lined ditch.)

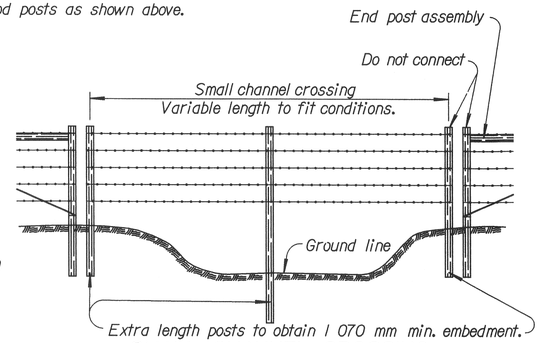

SMALL CHANNEL CROSSING

The above sketch is typical and can be varied to fit existing conditions. Small channel crossings shall be included in the bid length of fence. All extra materials and labor within the small channel crossing shall be subsidiary.

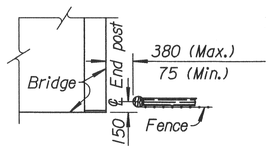

FENCE DETAILS
AT BRIDGE ABUTMENTS
(Use appropriate post and brace for fence type. Dimensions are common for all fence types.)

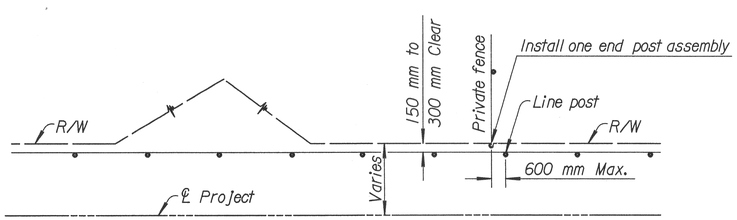

TYPICAL INSTALLATION DIAGRAM

Note: Right of Way fence shall generally be set parallel to and 150 mm to 300 mm clear from the Right of Way line, with posts on the highway side.

The alignment layouts shown are typical, but are not representative of all situations that may occur. Construction may be varied, as required to meet field conditions and/or as directed by the Engineer.

The access control fence shall be attached to the private fence end post assembly using leader wires or staples.

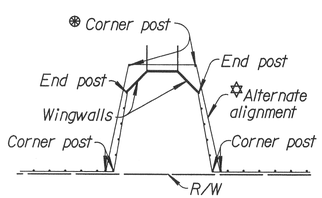

FENCE ALIGNMENT
AT UNDERPASS OR
BOX DRAINAGE STRUCTURE

Alternate alignment may be used at deep underfill culverts, as directed by the Engineer.

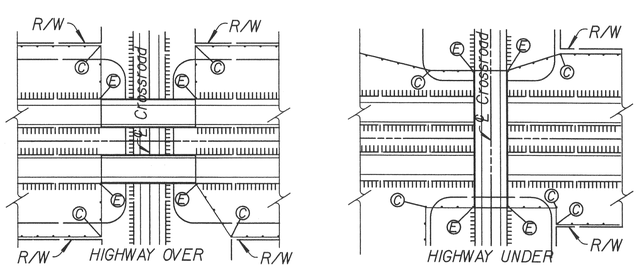

FENCE ALIGNMENT AT BRIDGE ABUTMENTS

Where fence installation over a drainage structure is located within the clear zone, horizontal bracing at the corner posts will not be permitted. An alternate design utilizing diagonal bracing shall be provided.

NO.	DATE	REVISIONS	BY	APP'D
6	5-30-02	Removed KDOT ownership sign.	S.W.K.	J.O.B.
5	10- 5-00	Revised bolt callouts	R.J.S.	J.O.B.
4	12-30-97	Connect to Private Fence End Post	R.J.S.	J.O.B.

KANSAS DEPARTMENT OF TRANSPORTATION

INSTALLATION DETAILS
BARBED, WOVEN, & CHAIN LINK
HIGHWAY FENCE

RD526 SI

FHWA APPROVAL	8-7-02	APP'D. James O. Brewer	
DESIGNED	DETAILED	QUANTITIES	TRACED Bowser
DESIGN CK.	DETAIL CK.	QUAN.CK.	TRACE CK. Seitz

DATE	BY	
9-01	M Adams	
11-01	R Stegman	

REFERENCES NOTED
REFERENCES CHECKED

Plotted : 4/6/2004
Drawn By : rstegman
File : p:\0154\0154i rd526si.dgn
Section : $$$$KDOTGRP$$$$