STATE	PROJECT NO.	YEAR	SHEET NO.	TOTAL SHEETS
KANSAS	52 U-1785-01	2003	44	143

NOTE: The use of Straw or Hay Bales, Silt Fence or Triangular Silt Dike for Temporary Inlet Sediment Barrier is at the option of the Contractor.

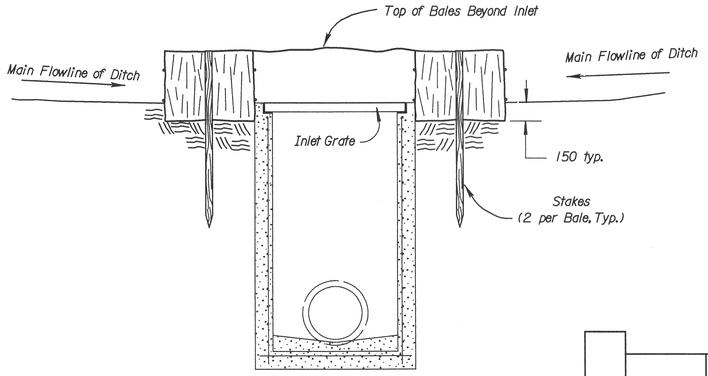

SECTION D - D

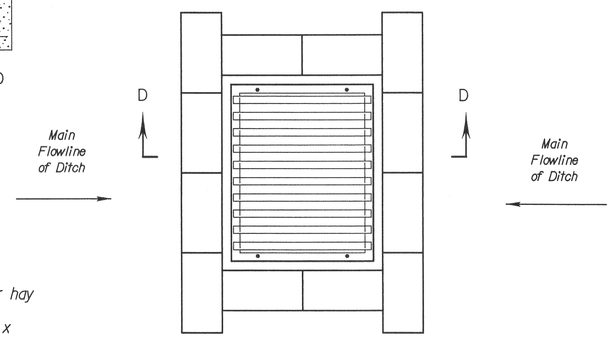

PLAN

STRAW OR HAY BALES:

1. Place bales tightly together, with loose straw or hay wedged between bales to close off openings.
2. Wood stakes shall be 50 mm x 50 mm (nom.) x 1 200 mm (min.) long.
3. Refer to plans sheets to estimate the number of bales required.
4. Use only twine to bind bales. The use of wire binding is prohibited because it does not readily biodegrade.

TEMPORARY INLET SEDIMENT BARRIER
(STRAW OR HAY BALE METHOD)

NO SCALE

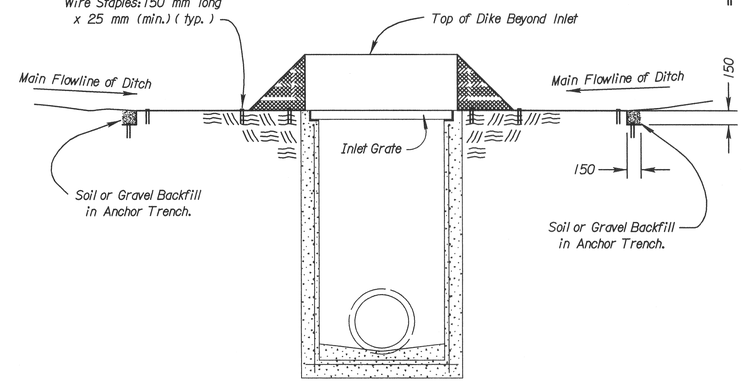

SECTION A - A

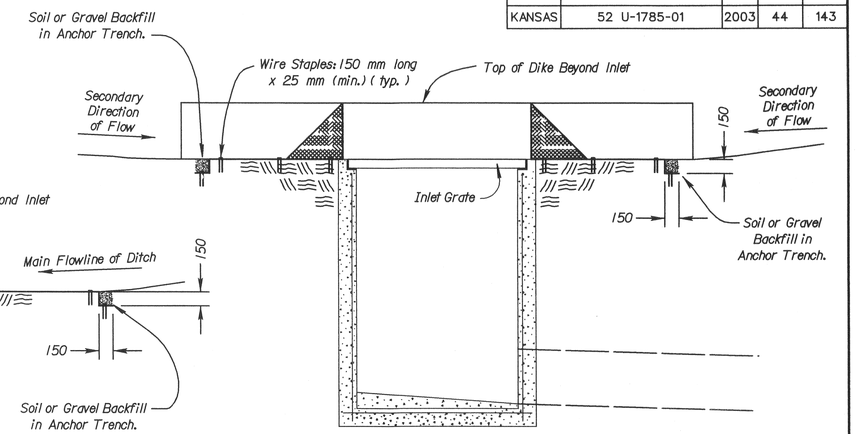

SECTION B - B

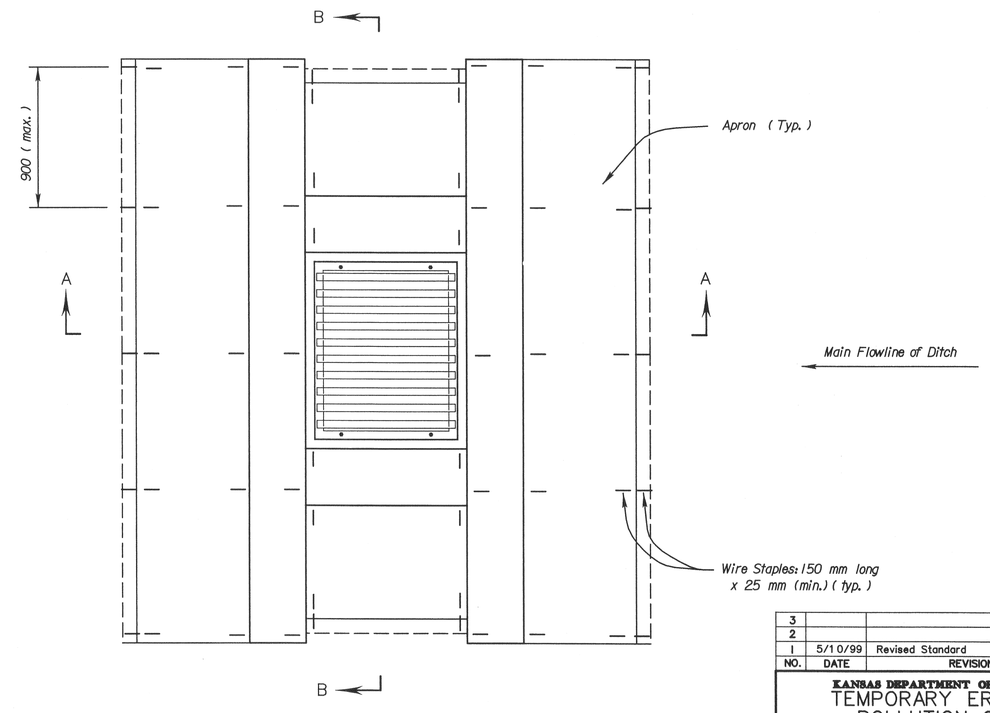

PLAN

TEMPORARY INLET SEDIMENT BARRIER
(TRIANGULAR SILT DIKE METHOD)

NO SCALE

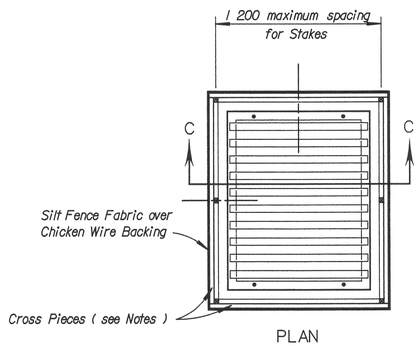

PLAN

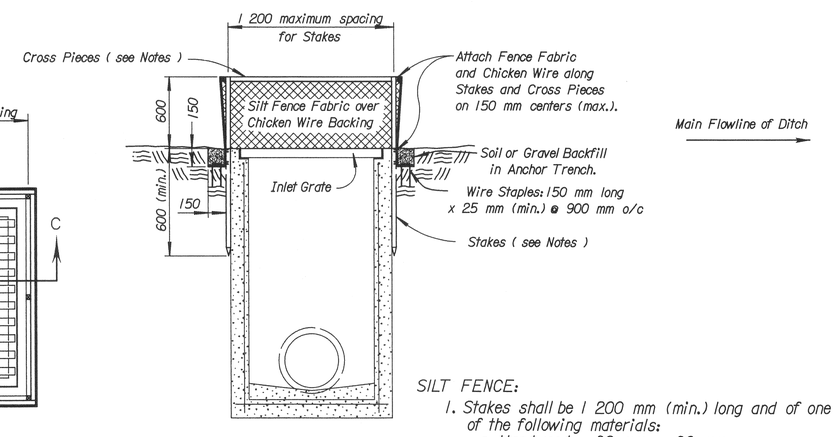

SECTION C - C

TEMPORARY INLET SEDIMENT BARRIER
(SILT FENCE METHOD)

NO SCALE

SILT FENCE:

1. Stakes shall be 1 200 mm (min.) long and of one of the following materials:
   a. Hardwood - 30 mm x 30 mm;
   b. Southern Pine (No. 2) - 65 mm x 65 mm;
   c. Steel U, T, L, or C Section - 600 grams per 300 mm; or
   d. Synthetic - same strength as wood stakes.
2. Cross Pieces shall be of same material as Stakes.
3. Attach fence fabric to stakes with staples, wire or nails.
4. Refer to plan sheets to estimate the length of Silt Fence required.

NO.	DATE	REVISIONS	BY	APP'D
3				
2				
1	5/10/99	Revised Standard	WCL	RDR

KANSAS DEPARTMENT OF TRANSPORTATION

TEMPORARY EROSION AND POLLUTION CONTROL

TEMP. INLET SEDIMENT BARRIER (SILT FENCE)
TEMP. INLET SEDIMENT BARRIER (BALES)
TEMP. INLET SEDIMENT BARRIER (T.S.D.)

LA852C SI

F.H.W.A. APPROVAL	5/20/99	APP'D	Richard D. Ross		
DESIGNED WCL	DETAILED WCL	QUANTITIES	TRACED WCL		
DESIGN CK. RDR	DETAIL CK. RDR	QUAN.CK.	TRACE CK. RDR		

REFERENCES NOTED	BY	DATE
	M Adams	9-01
REFERENCES CHECKED	R Stegman	11-01

Plotted : 4/6/2004
Drawn By : rstegman
File : p:\0154\01541 la852csi.dgn
Section : $$$$KDOTGRP$$$$