STATE	PROJECT NO.	YEAR	SHEET NO.	TOTAL SHEETS
KANSAS	52 U-1785-01	2003	51	143

DETECTOR INPUT FILE LAYOUT

		1	2	3	4	5	6	7	8	9	10	11	12	13	14
"I"	U	Ø1 E,CT	Ø2 E,CT	Ø2 E,CT	Ø2 CALL	Ø3 E,CT	Ø4 E,CT	Ø4 E,CT	Ø4 CALL	Ø1 E,CT	NA	ADV	PED Ø2	PED Ø6	FLH
	L		Ø2 E,CT	Ø2 E			Ø4 E,CT	Ø4 E		Ø3 E,CT	NA	SP1	PED Ø4	PED Ø8	STOP TIME
"J"	U	Ø5 E,CT	Ø6 E,CT	Ø6 E,CT	Ø6 CALL	Ø7 E,CT	Ø8 E,CT	Ø8 E,CT	Ø8 CALL	Ø5 E,CT	NA	SP2	EVA	EVC	RR1
	L		Ø6 E,CT	Ø6 E			Ø8 E,CT	Ø8 E		Ø7 E,CT	NA	SP3	EVB	EVD	RR2

FRONT VIEW

U = Upper
L = Lower

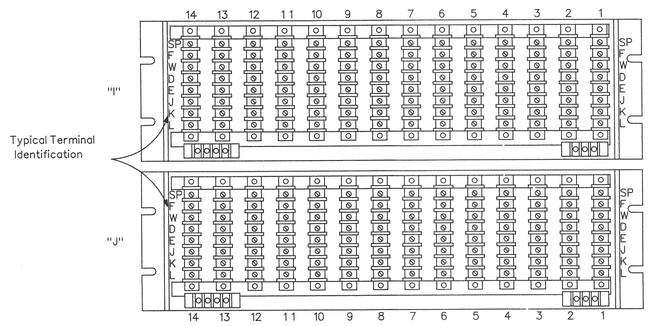

REAR PLANE

DETECTOR WIRING DIAGRAM

DETECTOR NUMBER	FILE LOCATION	TERMINAL NUMBER	DETECTOR NUMBER	FILE LOCATION	TERMINAL NUMBER
	I 1	DE		J 1	DE
	I 1	JK		J 1	JK
	I 2	DE		J 2	DE
	I 2	JK		J 2	JK
24, 25	I 3	DE	64, 65	J 3	DE
22, 23	I 3	JK	62, 63	J 3	JK
20	I 4	DE	60	J 4	DE
21	I 4	JK	61	J 4	JK
	I 5	DE		J 5	DE
	I 5	JK		J 5	JK
	I 6	DE		J 6	DE
	I 6	JK		J 6	JK
	I 7	DE		J 7	DE
	I 7	JK		J 7	JK
40	I 8	DE	80	J 8	DE
	I 8	JK		J 8	JK
	I 9	DE		J 9	DE
	I 9	JK		J 9	JK
	I 10	DE		J 10	DE
	I 10	JK		J 10	JK
	I 11	DE		J 11	DE
	I 11	JK		J 11	JK
2P1,2P2	I 12	DE	OPT-1	J 12	DE
4P1,4P2	I 12	JK	OPT-2	J 12	JK
6P1,6P2	I 13	DE		J 13	DE
	I 13	JK		J 13	JK
	I 14	DE		J 14	DE
	I 14	JK		J 14	JK

FIELD TERMINALS

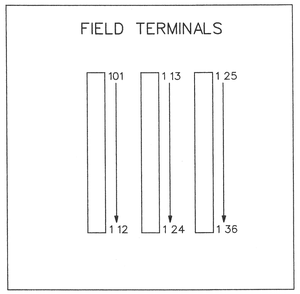

REAR PANEL

	FIELD TERM.	INDICATION	SIGNAL HEAD NO.
	101	RED	20, 21, 22
Ø2	102	YELLOW	20, 21, 22
	103	GREEN	20, 21, 22
	104	DONT WALK	2P1, 2P2
Ø2P	105		
	106	WALK	2P1, 2P2
	107	RED	60, 61, 62
Ø6	108	YELLOW	60, 61, 62
	109	GREEN	60, 61, 62
	110	DONT WALK	6P1,6P2
Ø6P	111		
	112	WALK	6P1,6P2
	113	DONT WALK	4P1,4P2
Ø4P	114		
	115	WALK	4P1,4P2
	116	RED	40, 41
Ø4	117	YELLOW	40, 41
	118	GREEN	40, 41
	119	DONT WALK	
	120		
	121	WALK	
	122	RED	80, 81
Ø8	123	YELLOW	80, 81
	124	GREEN	80, 81
	125	RED	
	126	YELLOW	
	127	GREEN	
	128	RED	
	129	YELLOW	
	130	GREEN	
	131	RED	
	132	YELLOW	
	133	GREEN	
	134	RED	
	135	YELLOW	
	136	GREEN	

NOTE:
Wiring identification shall be consistent with numbers shown for poles, signal heads and detectors.

LEGEND

C POWER LEAD-IN WIRE 6 AWG 3/C
D TRAFFIC SIGNAL CABLE 14 AWG 7/C
E LIGHTING DISTRIBUTION CABLE 8 AWG 2/C
F CAMERA POWER CABLE 8 AWG 2/C
G GROUND 6 BARE COPPER
H CAMERA SIGNAL CABLE COAX
I OPT. CABLE 20 AWG 4/C

PUSHED CONDUIT (STEEL)
TRENCHED CONDUIT (PVC)

NOT TO SCALE

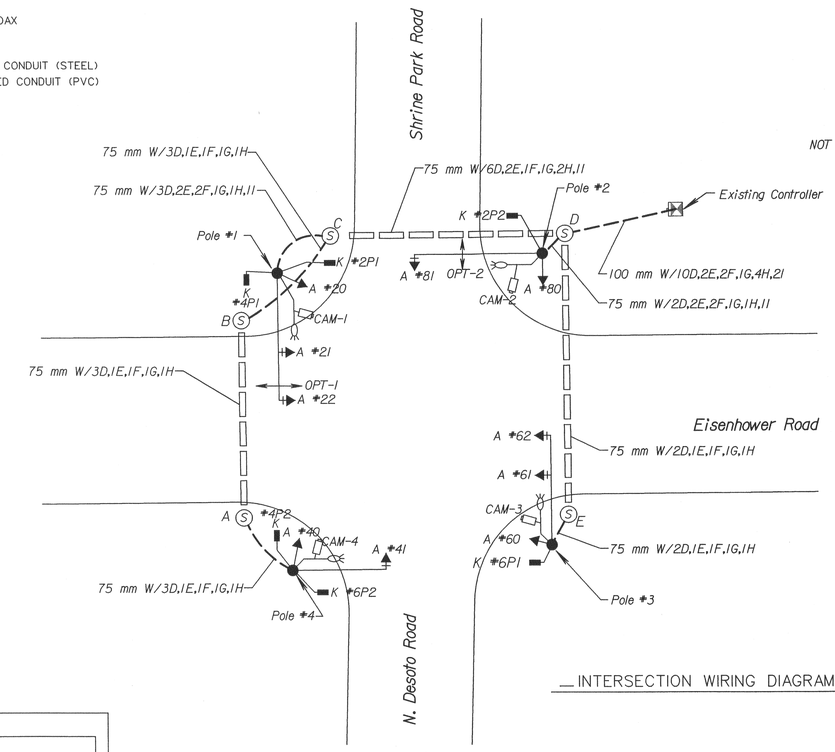

INTERSECTION WIRING DIAGRAM

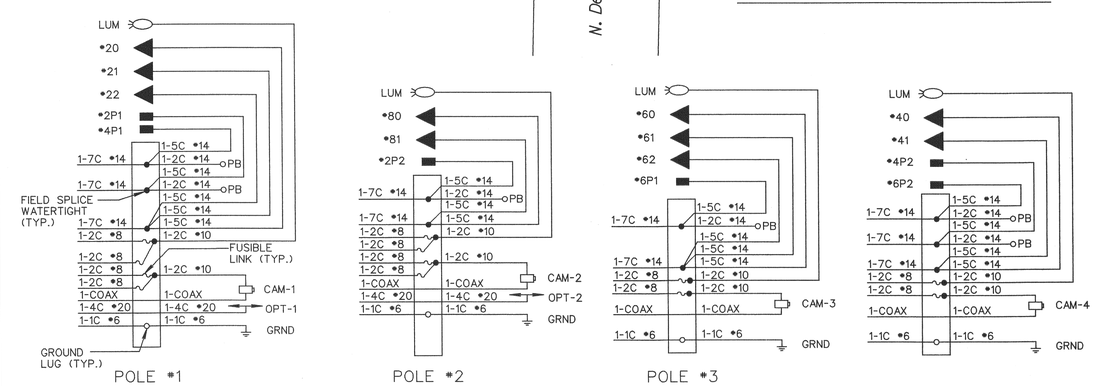

SIGNAL POLE WIRING DIAGRAM

NO.	DATE	REVISION	BY	APP'D
3				
2				
1				

KANSAS DEPARTMENT OF TRANSPORTATION
MODEL 170E
TRAFFIC SIGNAL CONTROLLER
WIRING DETAILS

TE140SI 04/05/95

FHWA APPROVAL	06/08/95	APP'D	James E. Tobaben
DESIGNED	DETAILED	QUANTITIES	TRACED
DESIGN CK.	DETAIL CK.	QUAN. CK.	TRACE CK.

DATE	BY
9-01	W Adams
11-01	R Stegman

REFERENCES NOTED
REFERENCES CHECKED

Plotted : 4/6/2004
Drawn By : rstegman
Section : $$$$KDOTGRP$$$$
File : p:\01541\0154I Te140si.dgn