STATE	PROJECT NO.	YEAR	SHEET NO.	TOTAL SHEETS
KANSAS	52 U-1785-01	2003	53	143

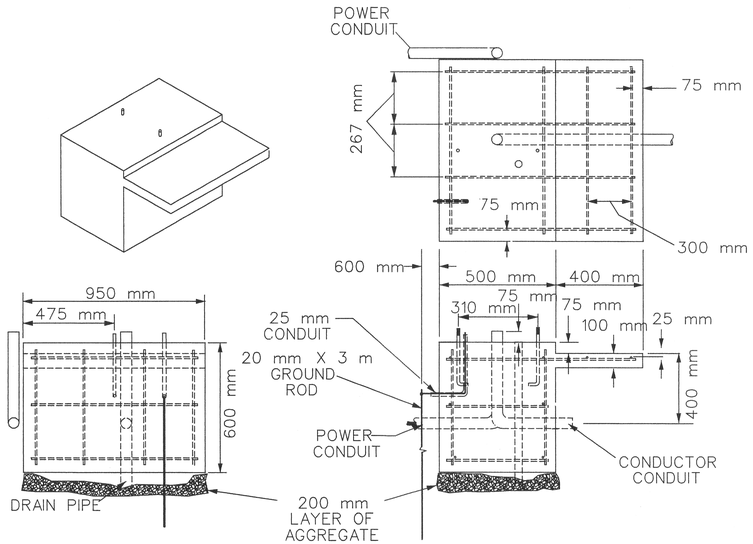

NEMA TYPE I (SIZE 5)
CABINET FOUNDATION DETAILS *

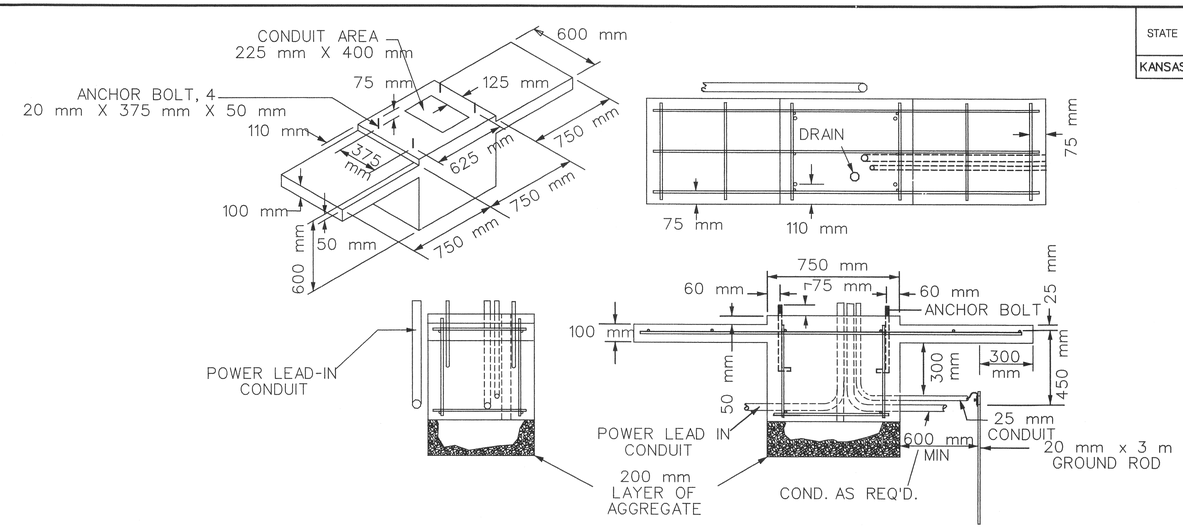

332B CABINET FOUNDATION DETAILS *

* NOTE: All reinforcing bars used in the construction of cabinet foundations shall be #13.

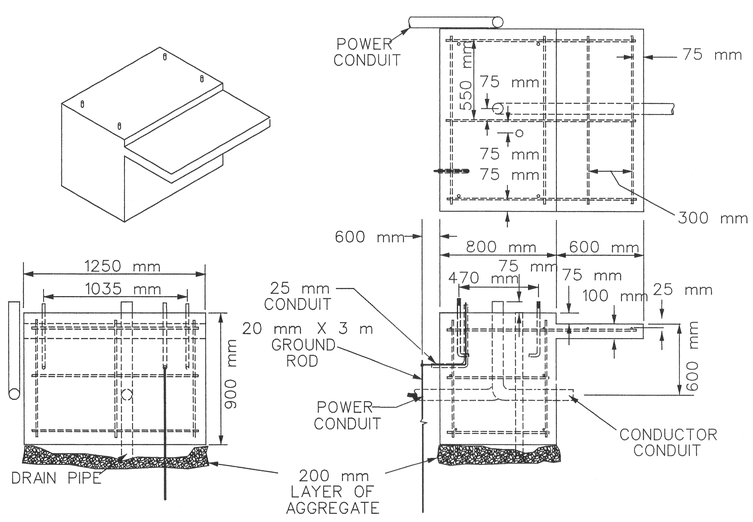

NEMA TYPE II (SIZE 6)
CABINET FOUNDATION DETAILS *

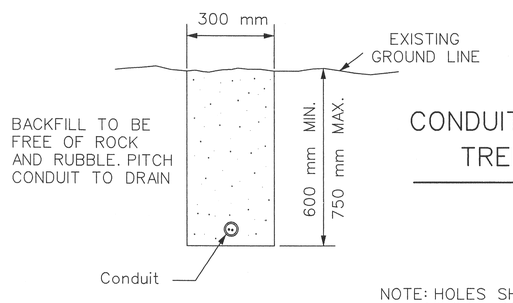

CONDUIT INSTALLATION
TRENCH DETAIL

NOTE: No. 6 AWG bare solid copper wire of type, ASTM B-3, shall be used as a continuous ground wire throughtout the signal system.

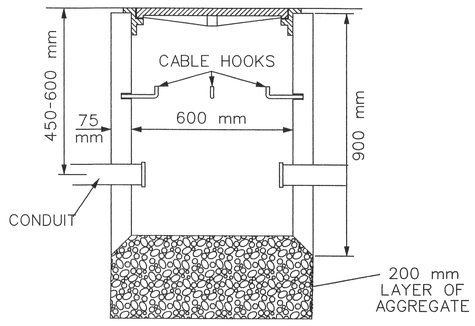

SERVICE BOX
INSTALLATION DETAIL

NOTE: HOLES SHALL BE DRILLED BEFORE THE SAW CUT

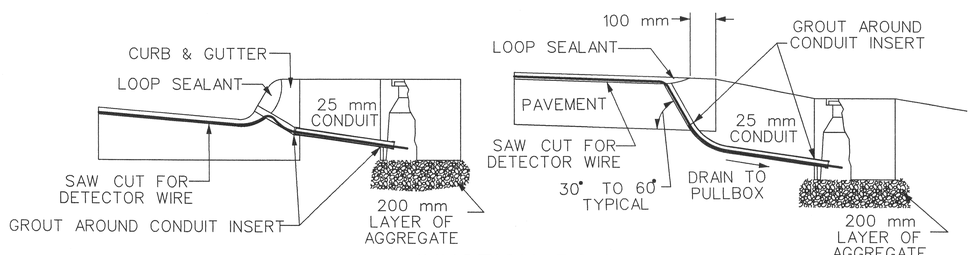

JUNCTION BOX
INSTALLATION DETAILS
WITH & WITHOUT
CURB & GUTTER

NO.	DATE	REVISION	BY	APP'D
3				
2	08/08/02	Revised rebar designation.	JFF	LGV
1	02/24/00	Add ground wire note.	JFF	LGV

KANSAS DEPARTMENT OF TRANSPORTATION

TRAFFIC SIGNAL INSTALLATION
DETAIL SHEET

TE110SI 04/28/98

FHWA APPROVAL	05/19/98		APP'D	Linda G. Voss	
DESIGNED	D.A.C.	DETAILED	J.F.F.	QUANTITIES	TRACED
DESIGN CK.	L.G.V.	DETAIL CK.	D.A.C.	QUAN. CK.	TRACE CK.

BY	DATE
W Adams	9-01
R Stegman	11-01

REFERENCES NOTED
REFERENCES CHECKED

Plotted : 4/16/2004
Drawn By : r:stegman
File : p:\01541\01541 te110si.dgn
Section : $$$$KDOTGRP$$$$