STATE	PROJECT NO.	YEAR	SHEET NO.	TOTAL SHEETS
KANSAS	52 U-1785-01	2003	54	143

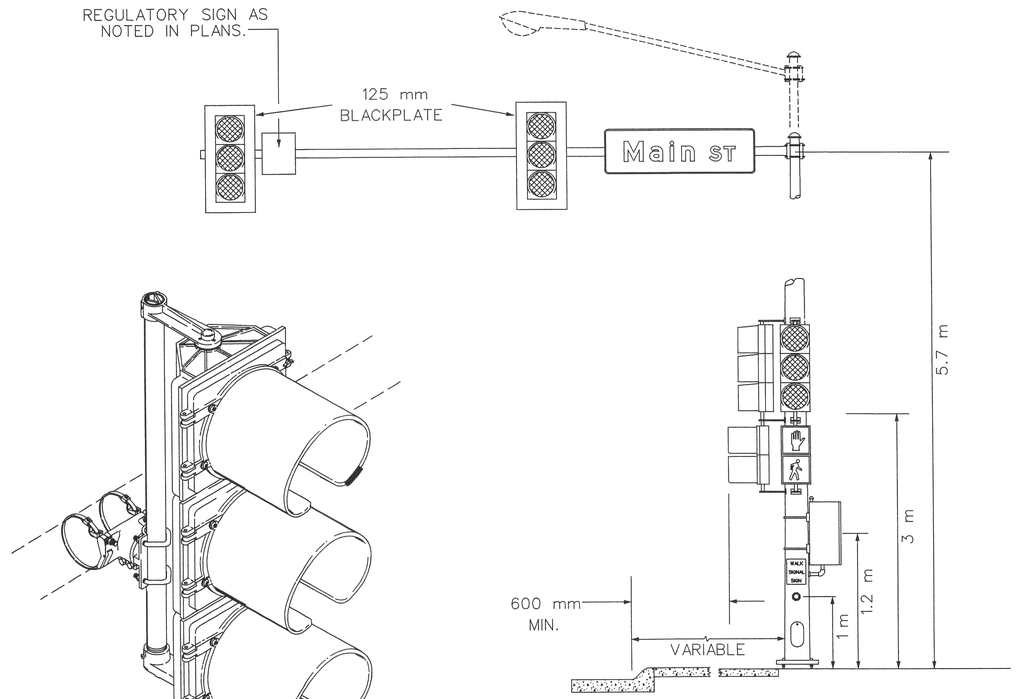

RIGID SIGNAL MOUNTING DETAIL

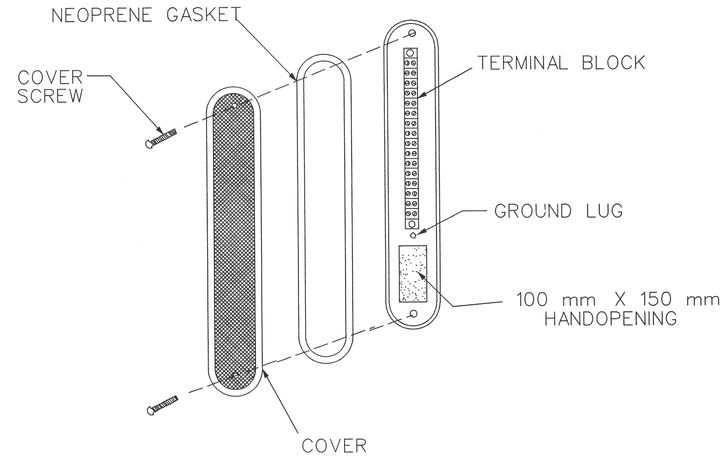

WIRING TERMINAL HAND HOLE

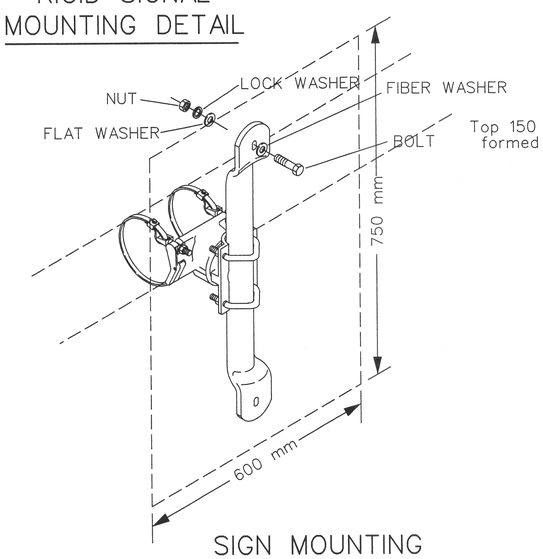

SIGN MOUNTING BRACKET DETAIL SIGNS OVER 450 mm TALL (R10 SERIES)

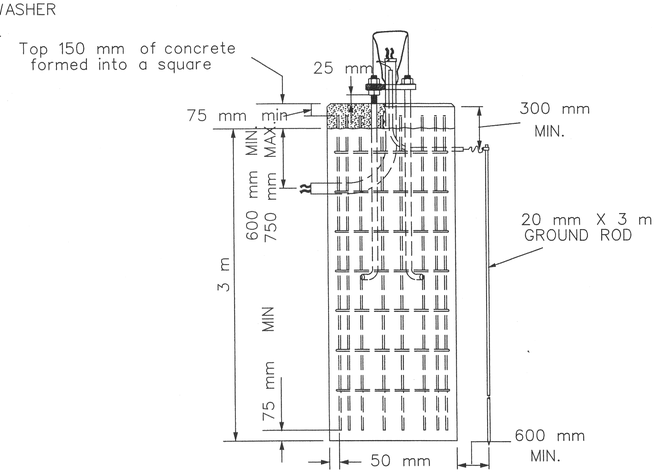

MAST ARM POLE & BASE DETAIL

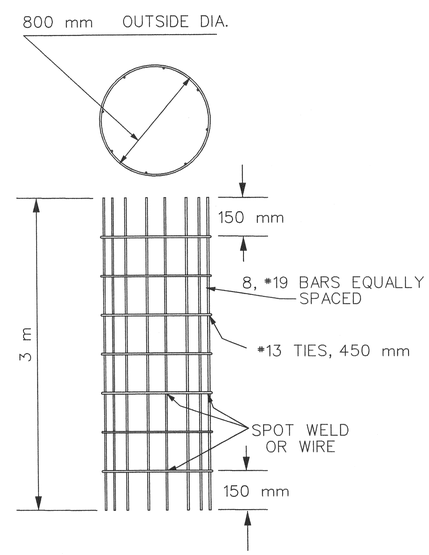

MAST ARM POLE REBAR CAGE DETAIL

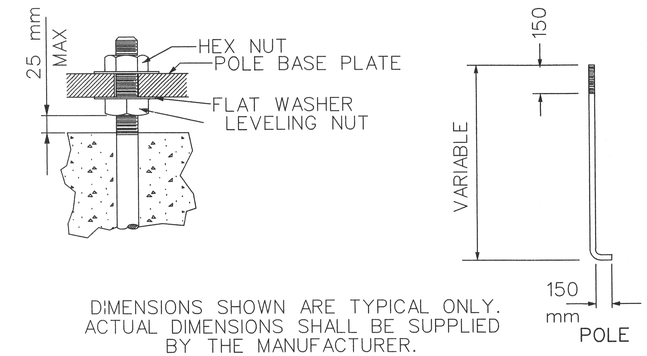

DIMENSIONS SHOWN ARE TYPICAL ONLY. ACTUAL DIMENSIONS SHALL BE SUPPLIED BY THE MANUFACTURER.

MAST ARM POLE ANCHOR BOLT DETAIL

NO.	DATE	REVISION	BY	APP'D
3				
2				
1	08/08/02	Revised rebar designations.	JFF	LGV

KANSAS DEPARTMENT OF TRANSPORTATION

TRAFFIC SIGNAL INSTALLATION DETAIL SHEET

TE111ASI 04/28/98

FHWA APPROVAL	05/18/98		APP'D	Linda G. Voss	
DESIGNED	D.A.C.	DETAILED J.F.F.	QUANTITIES	TRACED	
DESIGN CK.	L.G.V.	DETAIL CK. D.A.C.	QUAN. CK.	TRACE CK.	

	BY	DATE
REFERENCES NOTED	M Adams	9-01
REFERENCES CHECKED	R Stegman	11-01

Plotted : 4/6/2004
Drawn By : rstegman
Section : $$$KDOTGRP$$$$
File : p:\0154\0154\ tel11asi.dgn